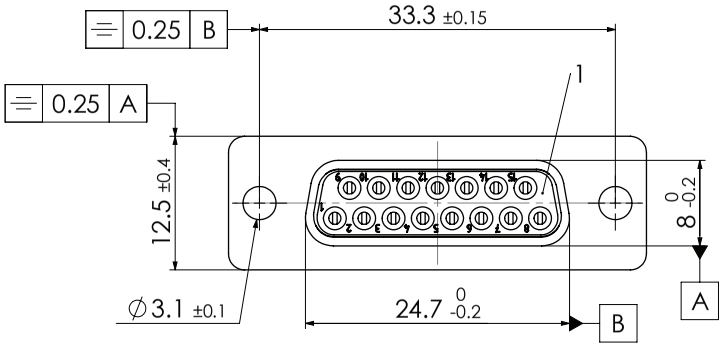

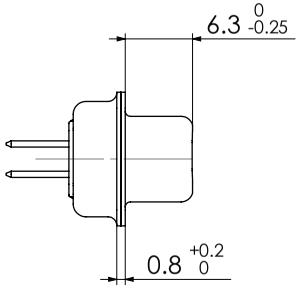

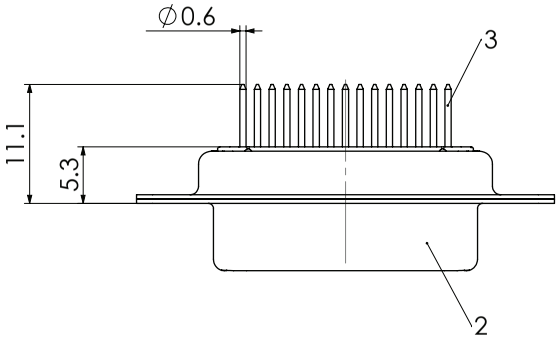

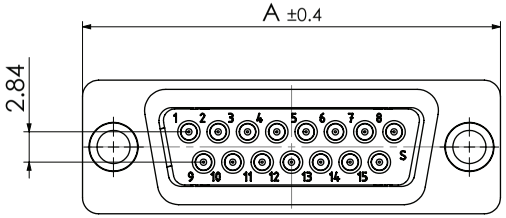

Fxx*1)S1Gy*2)

e.g. F15S1G1

*1) xx No. of contacts 09, 15, 25 or 37
*2) y for performance classes 1, 2 or 3
(contact cycle for G1/G2/G3 = 500/200/50)

xx	A [mm]	B [mm]	C [mm]	*E [mm]
09	30.8	16.4	25	ø1
15	39.1	24.7	33.3	
25	53	38.5	47.04	
37	69.3	54.9	63.5	

RoHS compliant

*PCB hole patterns, øE on supplement AM0023

No.	St.	Part	Type Description/Material	Surface plating/Colour/Class
3	xx	Signal contact	S1 / Brass	G1/G2/G3
2	1	Shell	Steel	tin plated
1	1	Insulator	PBT (-55°C - +125°C)	white

Measurement without tolerance acc. to ISO 2768-m
SCALE 2:1
TITLE D-Sub Miniature Connector
NAME / DATE
DRAWN Denzinger 11-02-2003
CHECKED Floßmann 12-02-2003
FCT a molex company
DWG.NO. FxxS1Gy
REV. 1
REV. 1 | DATE | CH.-NO.
ORIGINAL: DIN A3-DRAWING AS A FILE
REPLACEMENT FOR: FxxS1Gy a
PAGES 1

COMMENT:
ALL RIGHTS ARE RESERVED BY US FOR THIS DRAWING, WITHOUT OUR PRIOR CONSENT,
IT MAY NEITHER BE DUBLICATED NOR MADE AVAILABLE TO A THIRD PARTY,
AND IT ALSO MAY NOT BE IMPROPERLY USED BY TE RECEIVER, OR A THIRD PARTY.