THIS DRAWING IS UNPUBLISHED. RELEASED FOR PUBLICATION
© COPYRIGHT BY TYCO ELECTRONICS CORPORATION. ALL RIGHTS RESERVED.

LOC	DIST
AP	-

REVISIONS

P	LTR	DESCRIPTION	DATE	DWN	APVD
	A	RELEASED BY RSA 10/138-02	06JAN2011	PP	GO
	B	REVISED DESIGN ECO-11-001144	19JAN2011	NCL	GO
	C	REVISED DESIGN ECO-11-004129	01MAR2011	NCL	ASV

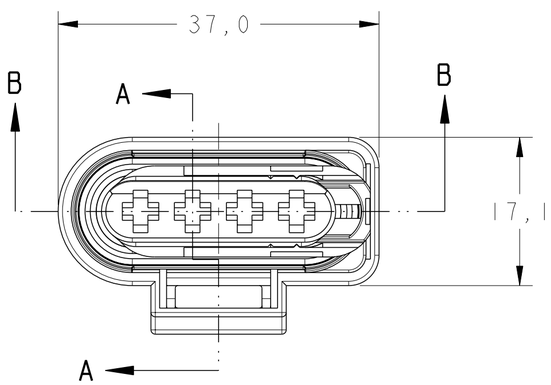

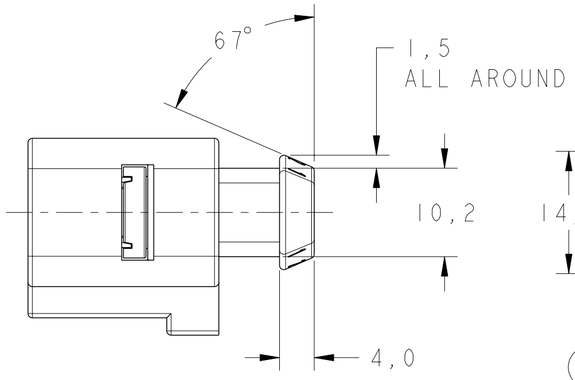

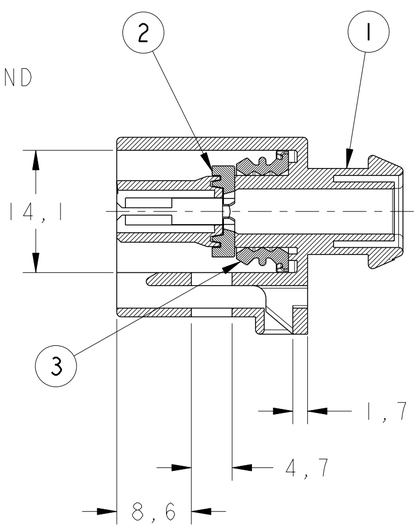

SECTION A-A

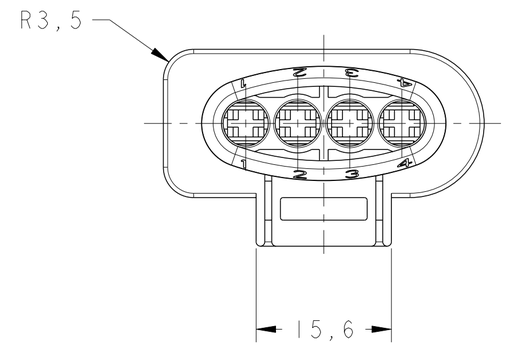

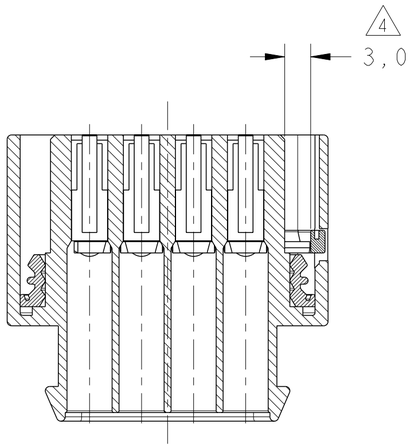

SECTION B-B

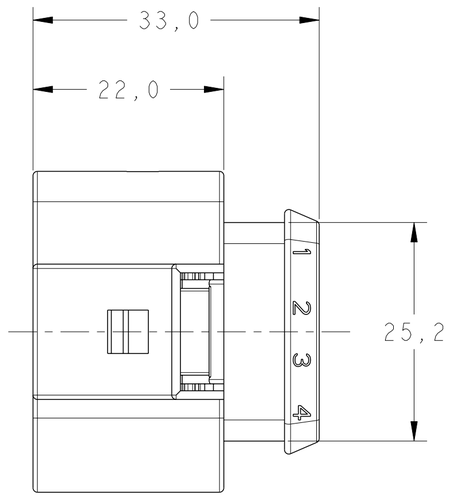

GRAVAÇÕES MARKINGS
LOGOTIPO TE TE LOGO
CÓDIGO PAÍS PRODUTOR MANUFACTURER COUNTRY CODE
NOMENCLATURA MATERIAL MATERIAL NOMENCLATURE
NÚMERO COMPONENTE TE TE COMPONENT NUMBER
NÚMERO CAVIDADE CAVITY NUMBER
IDENTIFICAÇÃO CIRCUITO CIRCUIT IDENTIFICATION
PAÍS PRODUTOR MANUFACTURER COUNTRY
REV+ LETRA REV.DA PEÇA REV.+ PART REV.LETTER
RELOGIO DATADOR DATE CODE

1- CARACTERES DE ACORDO COM NORMA DIN 1451
CHARACTERS ACCORDING TO DIN 1451

2- ALTURA DOS CARACTERES 1,2 E BAIXO RELEVO DE 0,2 E ZONA REBAIXADA 0,0 OU
ALTURA DOS CARACTERES 1,2 E ALTO RELEVO DE 0,2 E ZONA REBAIXADA DE 0,2.
CHARACTERS HEIGHT 1,2 RECEDED 0,2 ZONE RECESSED 0,0 OR
CHARACTERS HEIGHT 1,2 RAISED 0,2 ZONE RECESSED 0,2

3- RAIOS DE 0,5 EXCETO ONDE INDICADO
ALL RADII 0,5 EXCEPT AS NOTED

4 -FORNECIDO COMO MOSTRADO NA POSIÇÃO DE PRE-TRAVAMENTO.
APÓS INSERÇÃO DOS CONTATOS, EMPURRAR 3,0mm
SHOW AS SUPPLIED,RETAINER IN PRE-LOCKED POSITION.
AFTER CONTACT LOADING TO DRIFT 3,0mm

5- EMBALADO À GRANEL
BULK PACKAGED

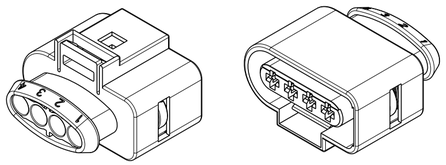

PERSPECTIVE VIEWS
SCALE 1:1

ASSY NO.	QTY	ITEM	DESCRIPTION	MATERIAL	FINISH
1599632-3	1	3	CONNECTOR SEAL, 4 POSN., JR.P.T.,RCPT.	SILICONE	LARANJA / ORANGE
	1	2	SPACER, 4 POSN., JR.P.T.,RCPT.	PBT + 10% GF	VIOLETA / VIOLET
	1	1	HOUSING, 4 POSN., JR.P.T.,RCPT.	PBT	PRETO / BLACK

THIS DRAWING IS A CONTROLLED DOCUMENT FOR TYCO ELECTRONICS CORPORATION. IT IS SUBJECT TO CHANGE AND THE CONTROLLING ENGINEERING ORGANIZATION SHOULD BE CONTACTED FOR THE LATEST REVISION.

DIMENSIONS: mm

TOLERANCES UNLESS OTHERWISE SPECIFIED:
0 PLC ±-
1 PLC ±0.3
2 PLC ±-
3 PLC ±-
4 PLC ±-
ANGLES ±3°

MATERIAL SEE TABLE
FINISH SEE TABLE

Pro|ENGINEER WILDFIRE 4.0
DO NOT REVISE EXCEPT BY CAD

DWN 06JAN2011 P.PULGROSSI
CHK 06JAN2011 J.R.GOLDSCHMIDT
APVD 06JAN2011 GENTIL OLIVEIRA
PRODUCT SPEC -
APPLICATION SPEC -
WEIGHT -

Tyco Electronics
TYCO ELECTRONICS do Brasil LTDA.
Sao Paulo, Brasil

NAME
HOUSING ASSY., 4 POSN.,
JUNIOR POWER TIMER, RCPT.
-

SIZE	CAGE CODE	DRAWING NO	RESTRICTED TO
A2	00779	C- 1599632	

CUSTOMER DRAWING | SCALE 2:1 | SHEET 1 OF 1 | REV C