RoHS 2002/95/EC Compliant

## PLAIN - EMC SEALED IP68

| BOX SIZE (MM) | | | | | | ORDER CODE | | |
|---|---|---|---|---|---|---|---|---|
| PCB GUIDE | L | W | H | Screw Qty | Size | Plain | Powder Coated | Nylon Coated |
| | 88.9 | 34.9 | 30.5 | 4 | A | 480-C010 | 481-C010 ** | 482-C010 ** |
| | 114.3 | 63.5 | 30.5 | 4 | B | 480-C020 | 481-C020 ** | 482-C020 ** |
| | 114.3 | 88.9 | 55.9 | 4 | C | 480-C030 | 481-C030 ** | 482-C030 ** |
| | 114.3 | 64.5 | 55.9 | 4 | D | 480-C040 | 481-C040 ** | 482-C040 ** |
| | 171.5 | 120.6 | 55.9 | 6 | E | 480-C050 | 481-C050 ** | 482-C050 ** |
| | 171.5 | 120.6 | 106.7 | 6 | F | 480-C060 | 481-C060 ** | 482-C060 ** |
| | 222.3 | 146 | 56 | 6 | G | 480-C070 | 481-C070 ** | 482-C070 ** |
| | 222.3 | 146 | 106.7 | 6 | H | 480-C080 | 481-C080 ** | 482-C080 ** |
| * | 275 | 175 | 66 | 6 | J | 480-C090 | 481-C090 ** | 482-C090 ** |
| * | 139.7 | 101.6 | 77 | 4 | K | 480-C100 | 481-C100 ** | 482-C100 ** |
| * | 165 | 127 | 77 | 6 | L | 480-C110 | 481-C110 ** | 482-C110 ** |
| * | 120 | 100 | 36 | 4 | M | 480-C120 | 481-C120 ** | 482-C120 ** |
| * | 250 | 250 | 100.3 | 8 | N | 480-C130 | 481-C130 ** | 482-C130 ** |
| * | 80 | 55 | 26 | 4 | P | 480-C140 | 481-C140 ** | 482-C140 ** |
| * | 60 | 55 | 31 | 4 | Q | 480-C150 | 481-C150 ** | 482-C150 ** |

* Boxes with PCB guides ** Colour option - Code Suffix: Grey = A Blue = B Black = E

## FLANGED - EMC SEALED IP68

| BOX SIZE (MM) | | | | | | | ORDER CODE | | |
|---|---|---|---|---|---|---|---|---|---|
| PCB GUIDE | L | L (exc Flg) | W | H | Screw Qty | Size | Plain | Powder Coated | Nylon Coated |
| * | 114.3 | 89.2 | 35.15 | 30.5 | 4 | A | 483-C010 | 484-C010** | 485-C010** |
| * | 139.7 | 114.1 | 63.6 | 30.5 | 4 | B | 483-C020 | 484-C020** | 485-C020** |
| * | 139.7 | 114.2 | 63.7 | 55.9 | 4 | C | 483-C030 | 484-C030** | 485-C030** |
| * | 139.7 | 114.7 | 89.15 | 55.9 | 4 | D | 483-C040 | 484-C040** | 485-C040** |
| * | 202 | 171.8 | 120.8 | 55.9 | 6 | E | 483-C050 | 484-C050** | 485-C050** |
| * | 202 | 171.8 | 120.8 | 106.7 | 6 | F | 483-C060 | 484-C060** | 485-C060** |
| * | 252 | 222.6 | 146.4 | 55.9 | 6 | G | 483-C070 | 484-C070** | 485-C070** |
| * | 170 | 140 | 101.6 | 77 | 4 | K | 483-C100 | 484-C100** | 485-C100** |
| * | 152 | 120 | 100.2 | 36 | 4 | M | 483-C120 | 484-C120** | 485-C120** |

* Boxes with PCB guides ** Colour option - Code Suffix: Grey = A Blue = B Black = E

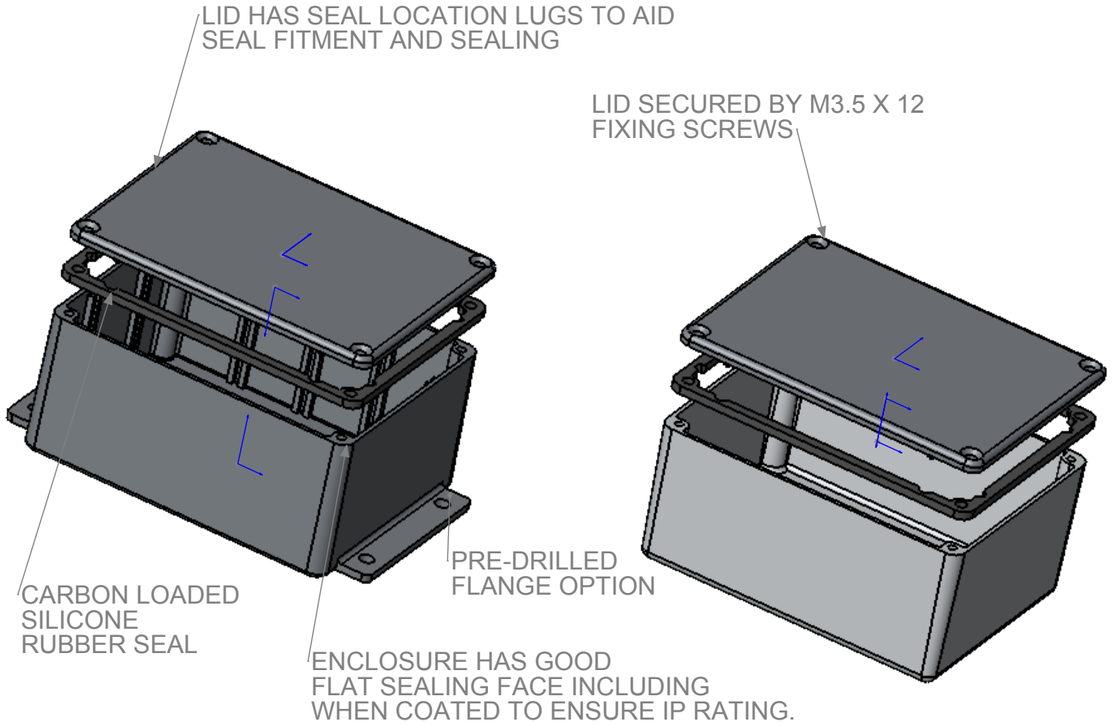


- A RANGE OF DIE CAST ALUMINIMUM ENCLOSURE SEALED TO BS EN 60529:1992 IP66, IP67 AND IP68 (5Mtrs for 1 hour)
- CARBON LOADED SEMI CONDUCTIVE SILICONE RUBBER SEAL AP701/2
- MIN SEAL THICKNESS 3.0MM - MIN SEAL FRAME WIDTH 4.0MM
- MIN ENCLOSURE WALL THICKNESS 1.5MM
- MIN ENCLOSURE LID THICKNESS 1.5MM

INTERPOLATED SIZES ARE PERMITTED PROVIDED THE MINIMUM CENTRES ARE MAINTAINED IN ACCORDANCE WITH THE 455/459 SERIES SPECIFICATION

**PROPRIETARY AND CONFIDENTIAL**
THE INFORMATION CONTAINED IN THIS DRAWING IS THE SOLE PROPERTY OF **DEM MANUFACTURING**. ANY REPRODUCTION IN PART OR AS A WHOLE WITHOUT THE WRITTEN PERMISSION OF **DEM MANUFACTURING** IS PROHIBITED.

DEM

Drawn by W.COXON 27/05/09

FINISH: AS ABOVE

THIRD ANGLE PROJECTION

DEBUR AND BREAK SHARP EDGES

IF IN DOUBT ASK DO NOT SCALE DRAWING

UNLESS OTHERWISE SPECIFIED: DIMENSIONS ARE IN MILLIMETRES LINEAR TOLERANCES:

NO DECIMAL PLACES ±0.5mm
1 DECIMAL PLACE ±0.1mm
2 DECIMAL PLACES ±0.03mm

ANGULAR TOLERANCES: ±1°

MATERIAL:

A3

TITLE: GENERAL SPECIFICATION IP68 EMC RANGE OF ENCLOSURES

DWG NO. 48x-C IP68 EMC RANGE

ISSUE A

TEL: +44 1724 273200 E-MAIL: SALES@DEM-UK.COM WEBSITE: WWW.DEM-UK.COM

WEIGHT: 4565862.094

SCALE:1:2

SHEET 1 OF 1