THIS DRAWING IS UNPUBLISHED. RELEASED FOR PUBLICATION -,- .
© COPYRIGHT - By - ALL RIGHTS RESERVED.

| LOC | DIST |
|---|---|
| AD | 00 |

REVISIONS

| P | LTR | DESCRIPTION | DATE | DWN | APVD |
|---|---|---|---|---|---|
| | N3 | REVISED PER ECO-11-004587 | 11MAR11 | RK | HMR |

1. THE NOTED DIMENSIONS APPLY AT THE INTERSECTION OF THE POST AND HOUSING
2. POINT OF MEASUREMENT FOR PLATING THICKNESS
3. POSTS:.000030 GOLD IN CONTACT AREA, .000100-.000200 MATTE TIN-LEAD ON THE SOLDER TAIL, ALL OVER .000050 NICKEL
4. POSTS:.000030 GOLD IN CONTACT AREA, .000100-.000200 MATTE TIN ON THE SOLDER TAIL, ALL OVER .000050 NICKEL
5. OBSOLETE PARTS: OBSOLETE CIS STREAMLINING PER D.RENAUD/D.SINISI

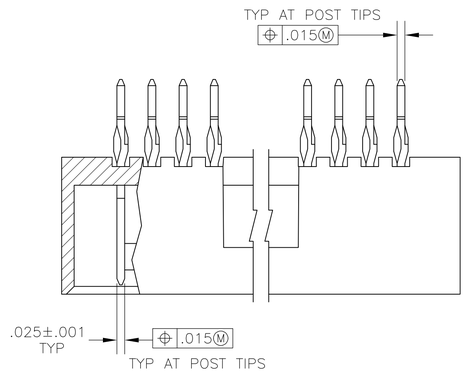


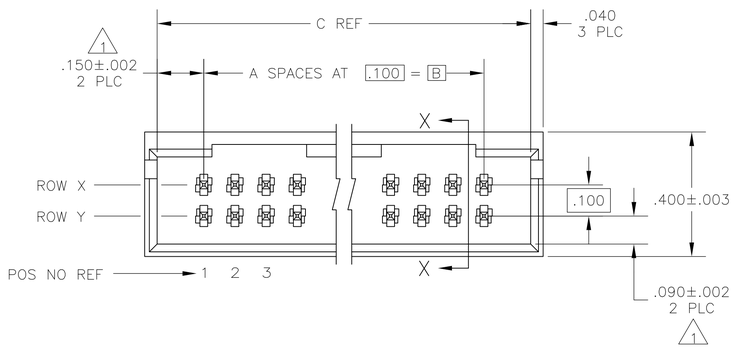


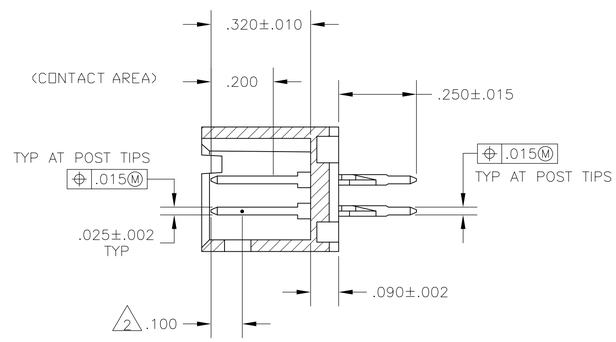


SECTION X-X

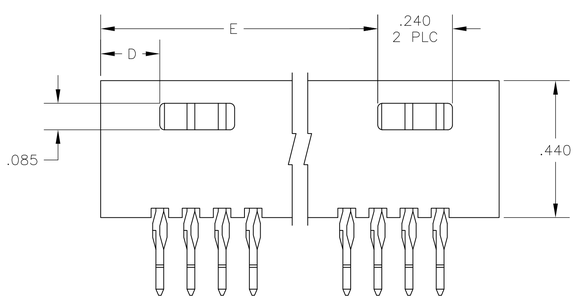


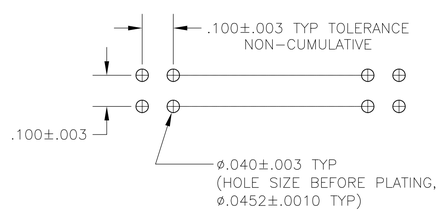


RECOMMENDED HOLE LAYOUT

| | | | | | | | | | | |
|---|---|---|---|---|---|---|---|---|---|---|
| 5 OBSOLETE | 4 | 5 | NONE | .890 | .190 | 1.200 | .900 | 9 | 20 | 7-102557-9 |
| 5 OBSOLETE | 4 | NONE | NONE | 1.090 | .190 | 1.400 | 1.100 | 11 | 24 | 6-102557-7 |
| 5 OBSOLETE | 4 | NONE | NONE | — | .490 | 1.100 | .800 | 8 | 18 | 6-102557-5 |
| | 4 | NONE | NONE | — | .390 | 1.000 | .700 | 7 | 16 | 6-102557-4 |
| 5 OBSOLETE | 4 | NONE | NONE | — | .390 | .900 | .600 | 6 | 14 | 6-102557-3 |
| 5 OBSOLETE | 4 | NONE | NONE | — | .290 | .800 | .500 | 5 | 12 | 6-102557-2 |
| | 4 | NONE | NONE | — | .190 | .600 | .300 | 3 | 8 | 6-102557-1 |
| | 4 | NONE | NONE | — | .190 | .500 | .200 | 2 | 6 | 6-102557-0 |
| | 4 | NONE | NONE | — | .290 | .700 | .400 | 4 | 10 | 5-102557-9 |
| | 4 | NONE | NONE | 2.890 | .190 | 3.200 | 2.900 | 29 | 60 | 5-102557-7 |
| 5 OBSOLETE | 4 | NONE | NONE | 2.390 | .190 | 2.700 | 2.400 | 24 | 50 | 5-102557-6 |
| 5 OBSOLETE | 4 | NONE | NONE | 1.590 | .190 | 1.900 | 1.600 | 16 | 34 | 5-102557-5 |
| 5 OBSOLETE | 4 | NONE | NONE | 1.390 | .190 | 1.700 | 1.400 | 14 | 30 | 5-102557-4 |
| 5 OBSOLETE | 4 | NONE | NONE | 1.190 | .190 | 1.500 | 1.200 | 12 | 26 | 5-102557-3 |
| | 4 | NONE | NONE | .890 | .190 | 1.200 | .900 | 9 | 20 | 5-102557-2 |
| | 4 | NONE | NONE | 1.890 | .190 | 2.200 | 1.900 | 19 | 40 | 5-102557-1 |
| 5 OBSOLETE | 3 | 5 | NONE | .890 | .190 | 1.200 | .900 | 9 | 20 | 2-102557-9 |
| OBSOLETE | 3 | NONE | NONE | 2.790 | .190 | 3.100 | 2.800 | 28 | 58 | 2-102557-8 |
| OBSOLETE | 3 | NONE | NONE | 2.690 | .190 | 3.000 | 2.700 | 27 | 56 | 2-102557-7 |
| OBSOLETE | 3 | NONE | NONE | 2.590 | .190 | 2.900 | 2.600 | 26 | 54 | 2-102557-6 |
| OBSOLETE | 3 | NONE | NONE | 2.490 | .190 | 2.800 | 2.500 | 25 | 52 | 2-102557-5 |
| OBSOLETE | 3 | NONE | NONE | 2.290 | .190 | 2.600 | 2.300 | 23 | 48 | 2-102557-4 |
| OBSOLETE | 3 | NONE | NONE | 2.190 | .190 | 2.500 | 2.200 | 22 | 46 | 2-102557-3 |
| OBSOLETE | 3 | NONE | NONE | 1.990 | .190 | 2.300 | 2.000 | 20 | 42 | 2-102557-2 |
| OBSOLETE | 3 | NONE | NONE | 1.790 | .190 | 2.100 | 1.800 | 18 | 38 | 2-102557-1 |
| OBSOLETE | 3 | NONE | NONE | 1.690 | .190 | 2.000 | 1.700 | 17 | 36 | 2-102557-0 |
| OBSOLETE | 3 | NONE | NONE | 1.490 | .190 | 1.800 | 1.500 | 15 | 32 | 1-102557-9 |
| OBSOLETE | 3 | NONE | NONE | 1.290 | .190 | 1.600 | 1.300 | 13 | 28 | 1-102557-8 |
| 5 OBSOLETE | 3 | NONE | NONE | 1.090 | .190 | 1.400 | 1.100 | 11 | 24 | 1-102557-7 |
| OBSOLETE | 3 | NONE | NONE | .990 | .190 | 1.300 | 1.000 | 10 | 22 | 1-102557-6 |
| 5 OBSOLETE | 3 | NONE | NONE | — | .490 | 1.100 | .800 | 8 | 18 | 1-102557-5 |
| | 3 | NONE | NONE | — | .390 | 1.000 | .700 | 7 | 16 | 1-102557-4 |
| | 3 | NONE | NONE | — | .390 | .900 | .600 | 6 | 14 | 1-102557-3 |
| | 3 | NONE | NONE | — | .290 | .800 | .500 | 5 | 12 | 1-102557-2 |
| | 3 | NONE | NONE | — | .190 | .600 | .300 | 3 | 8 | 1-102557-1 |
| | 3 | NONE | NONE | — | .190 | .500 | .200 | 2 | 6 | 1-102557-0 |
| | 3 | NONE | NONE | — | .290 | .700 | .400 | 4 | 10 | 102557-9 |
| OBSOLETE | 3 | NONE | NONE | 2.090 | .190 | 2.400 | 2.100 | 21 | 44 | 102557-8 |
| | 3 | NONE | NONE | 2.890 | .190 | 3.200 | 2.900 | 29 | 60 | 102557-7 |
| | 3 | NONE | NONE | 2.390 | .190 | 2.700 | 2.400 | 24 | 50 | 102557-6 |
| 5 OBSOLETE | 3 | NONE | NONE | 1.590 | .190 | 1.900 | 1.600 | 16 | 34 | 102557-5 |
| | 3 | NONE | NONE | 1.390 | .190 | 1.700 | 1.400 | 14 | 30 | 102557-4 |
| | 3 | NONE | NONE | 1.190 | .190 | 1.500 | 1.200 | 12 | 26 | 102557-3 |
| | 3 | NONE | NONE | .890 | .190 | 1.200 | .900 | 9 | 20 | 102557-2 |
| | 3 | NONE | NONE | 1.890 | .190 | 2.200 | 1.900 | 19 | 40 | 102557-1 |
| PLATING | | ROW Y | ROW X | E | D | C | B | A | NO OF POSN | ASSEMBLY PART NUMBER |
| | | POSTS OMITTED | | | | | | | | |

THIS DRAWING IS A CONTROLLED DOCUMENT.

DIMENSIONS: INCHES

TOLERANCES UNLESS OTHERWISE SPECIFIED:
0 PLC ± -
1 PLC ± -
2 PLC ± -
3 PLC ± .005
4 PLC ± -
ANGLES ± -

MATERIAL HOUSING: FLAME RETARDANT THERMOPLASTIC, COLOR:BLACK
POSTS: Cu-Ni-Sn

FINISH: SEE TABLE

DWN H MOLL 16JUL87
CHK L A MAYER 16JUL87
APVD T C CLARK 16JUL87

PRODUCT SPEC —
APPLICATION SPEC —
WEIGHT —

TE Connectivity

NAME: HDR ASSY, MOD II, COMPLIANT PIN, DBL ROW, .100X.100 C/L, 4 SIDED SHROUD

SIZE A1 | CAGE CODE 00779 | DRAWING NO C-102557 | RESTRICTED TO —

CUSTOMER DRAWING | SCALE 4:1 | SHEET 1 OF 1 | REV N3