PART NUMBER	ITEM ① BODY	ITEM ② CONTACT	ITEM ③ INSULATOR
142-0701-211	BRASS GOLD PL .00001 MIN OVER NICKEL PL .00005 MIN OVER COPPER PL .00005 MIN	BERYLLIUM COPPER GOLD PL .00003 MIN OVER NICKEL PL .00005 MIN OVER COPPER PL .00005 MIN	TEFLON
142-0701-216	BRASS NICKEL PL .0001 MIN OVER COPPER PL .00005 MIN	BERYLLIUM COPPER GOLD PL .00003 MIN OVER NICKEL PL .00005 MIN OVER COPPER PL .00005 MIN	TEFLON
142-0701-217	BRASS NICKEL PL .0001 MIN OVER COPPER PL .00005 MIN	BERYLLIUM COPPER GOLD PL .00003 MIN OVER NICKEL PL .00005 MIN OVER COPPER PL .00005 MIN	TEFLON

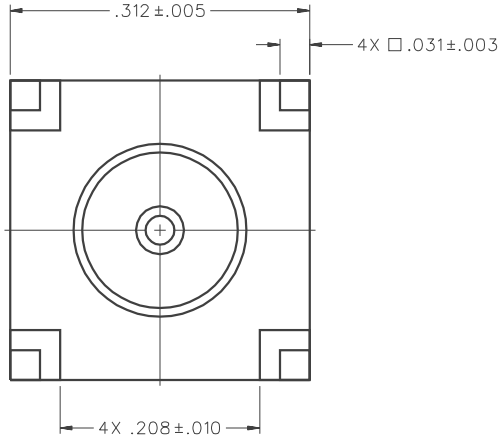

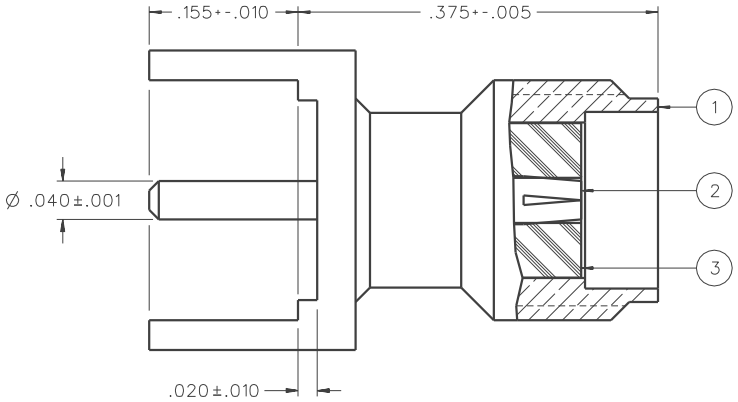

NOTES:

1. SPECIFICATIONS:

IMPEDANCE: 50 OHMS
FREQUENCY RANGE: 0-18 GHz
VSWR: NOT APPLICABLE
WORKING VOLTAGE: 335 VRMS MAX AT SEA LEVEL
DIELECTRIC WITHSTANDING VOLTAGE: 1000 VRMS MIN AT SEA LEVEL
INSULATION RESISTANCE: 5000 MEGOHM MIN
CONTACT RESISTANCE:
CENTER CONTACT - INITIAL 3.0 MILLIOHM MAX, AFTER ENVIRONMENTAL 4.0 MILLIOHM MAX
OUTER CONDUCTOR - INITIAL 2.0 MILLIOHM MAX AFTER ENVIRONMENTAL NOT APPLICABLE
BRAID TO BODY - NOT APPLICABLE
CORONA LEVEL: 250 VOLTS MIN AT 70,000 FEET
INSERTION LOSS: NOT APPLICABLE
RF LEAKAGE: NOT APPLICABLE
RF HIGH POTENTIAL WITHSTANDING VOLTAGE: 670 VRMS MIN AT 4 AND 7 MHz

MECHANICAL:

ENGAGE/DISENGAGE TORQUE: 2 INCH-POUNDS MAX
MATING TORQUE: 7-10 INCH POUNDS
COUPLING PROOF TORQUE: NOT APPLICABLE
COUPLING NUT RETENTION: NOT APPLICABLE
CONTACT RETENTION: 6 LBS MIN AXIAL FORCE
4 IN-OZ MIN RADIAL TORQUE
CABLE ACCEPTABILITY: NOT APPLICABLE
CABLE HEX CRIMP SIZE: NOT APPLICABLE
CABLE RETENTION: NOT APPLICABLE
DURABILITY: 500 CYCLES MIN

ENVIRONMENTAL:

(MEETS OR EXCEEDS THE APPLICABLE PARAGRAPH OF MIL-PRF-39012)
THERMAL SHOCK: MIL-STD-202, METHOD 107, CONDITION B
OPERATING TEMPERATURE: -65 DEG C TO 165 DEG C
CORROSION: MIL-STD-202, METHOD 101, CONDITION B
SHOCK: MIL-STD-202, METHOD 213, CONDITION I
VIBRATION: MIL-STD-202, METHOD 204, CONDITION D
MOISTURE RESISTANCE: MIL-STD-202, METHOD 106

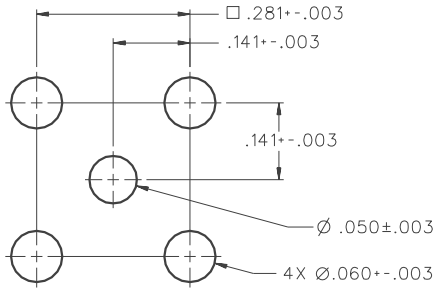

MOUNTING HOLE LAYOUT

DRAWING NO.
C - 142-0701-211/220

0	REVISIONS				
ENGINEERING RELEASE					
2	7-10-90	EJ	RJB	AAW	8-14-90 ECO 24762
ADDED: P/N 142-0701-217, DIA .050 +-.003 CHANGED: RF HIGH POT 4 AND 7 MHZ WAS 5 MHZ, 4X DIA .060+-.003 WAS 5X DIA .060+-.003					
3	3-18-93	RH	RJB	PAH	3-25-93 ECO 41606
VERSION UPDATE					
3a	3-10-94	RH	DMC	RJB	ECN 42346
VERSION UPDATE					
4	2-25-99	RH	TAK	RJB	ECN 46213
VERSION UPDATE ********** * REVISION NUMBER FOLLOWED BY AN ALPHA * * CHARACTER INDICATES DRAWING CLARIFI- * * CATION OR PART NUMBER ADDITION ONLY. * **********					
4a	10-16-01	RH	JKR	TAK	RJB ECN 47954

CUSTOMER DRAWING

THIS DRAWING TO BE INTERPRETED PER ANSI Y 14.5M - 1982

"μSTATION"

COMPANY CONFIDENTIAL

TOLERANCE UNLESS OTHERWISE SPECIFIED	DRAWN BY EJ	DATE 7-9-90	JOHNSON Components™ 299 Johnson Ave. P.O. Box 1732 Waseca, MN 56093-0832
DECIMALS .XX ___ .XXX ___ / mm ___	CHECKED BY	DATE	TITLE JACK ASSEMBLY STRAIGHT PC MOUNT SMA
MATL ___	APPROVED BY	DATE	
FINISH ___	APPROVED BY	DATE	CODE NO. / DRAWING NO. C - 142-0701-211/220
	RELEASE DATE 8-14-90		SCALE 10:1 / U/M INCH / SHEET 2 OF 2