MICRO SWITCH
a Honeywell Division
FED. MFG. CODE 91929

1.5C GEARTOOTH SENSOR

CATALOG LISTING
3GC401

THIS DRAWING COVERS A PROPRIETARY ITEM AND IS THE PROPERTY OF MICRO SWITCH. A DIVISION OF HONEYWELL. THIS DRAWING IS NOT TO BE COPIED OR USED WITHOUT THE APPROVAL OF MICRO SWITCH

PRELIMINARY OPERATING SPECIFICATIONS

	PARAMETER	CONDITION	DESIGN MIN.	DESIGN NOM.	DESIGN MAX.	UNITS
AG	AIR GAP	1	.30	.70	1.10	mm
AGm	AIR GAP MAX.	5			1.70	mm
Ta	TEMPERATURE		-40		130	°C
St	TARGET SPEED		0		4000	RPM
OP	OPERATE	2	-8.9	-5.2	-1.5	DEG.
RP	RELEASE	2	2.4	6.1	9.8	DEG.
PW	PULSE WIDTH	2	37.6	45.0	52.4	DEG.
Vs	SUPPLY VOLTAGE		6.0		16.0	VDC
Vmax	SUPPLY VOLTAGE MAX.				24.0	VDC
I	SUPPLY CURRENT				20.0	mA
Is	SINK CURRENT				10.0	mA
Tr	RISE TIME (R1=1KΩ)				18	uSec
Tf	FALL TIME				1	uSec
Vce(sat)	VOLTAGE COLLECTOR EMITTER (SATURATED)				600	mV
Iceo	LEAKAGE CURRENT (OFF)				20	uA
OPt	OPERATE OVER TEMP.	3	-11.4	-5.2	1.0	DEG.
RPt	RELEASE OVER TEMP.	3	0.1	6.1	12.3	DEG.
PWt	PULSE WIDTH OVER TEMP.	3	32.6	45.0	57.4	DEG.
DELTA OPs	DELTA OPERATE OVER SPEED	4	0.0		0.9	DEG.
DELTA RPs	DELTA RELEASE OVER SPEED	4	0.0		1.5	DEG.

NOTES
1. AIR GAP ASSUMES 0,75 mm OVERPACKAGE OF MODULE
2. 80°C, 0.7 mm AIR GAP, 300 RPM, 12V
3. -30 TO 120°C, 0,7 mm AIR GAP, 300 RPM, 12V
4. 80°C, 0,7 mm AIR GAP, 300 TO 3000 RPM, 12V
5. TWO PULSES PER ONE ROTATION AT 80°C, 1,7 mm AIR GAP, 300 RPM

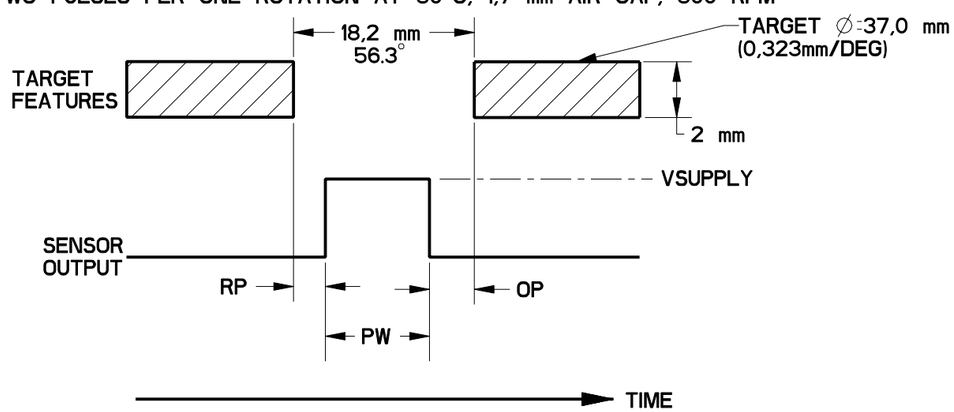

ANSI Y14.5M-1982 APPLIES

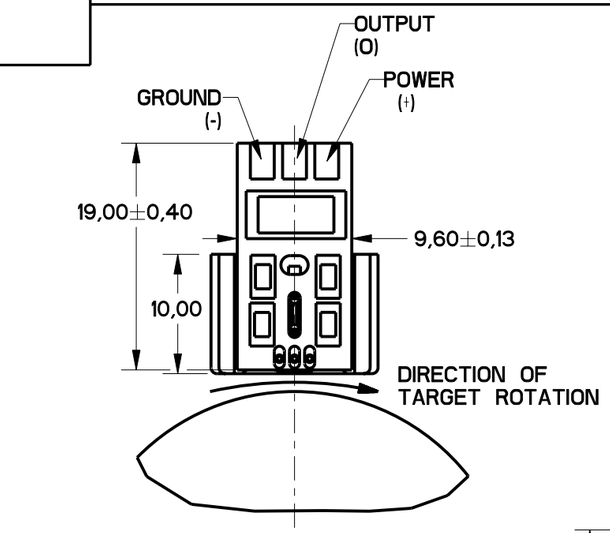

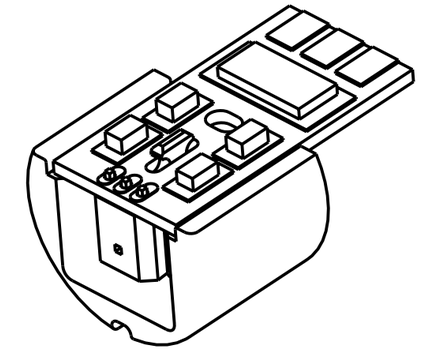

SCALE 3:1

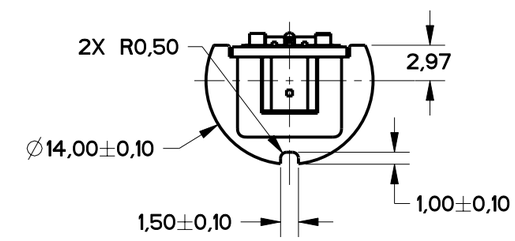

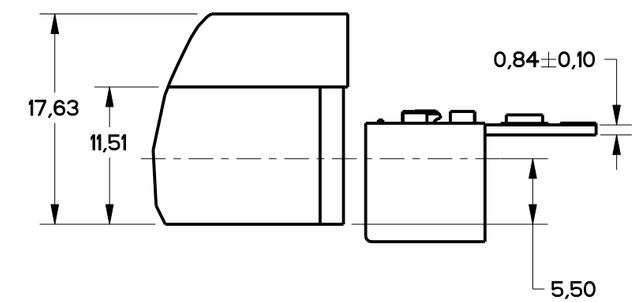

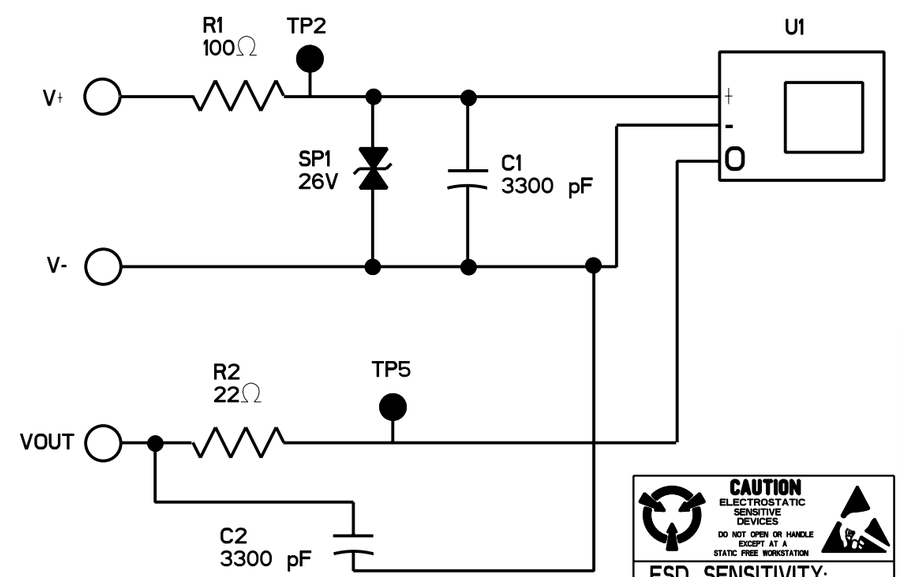

CAUTION
ELECTROSTATIC SENSITIVE DEVICES
DO NOT OPEN OR HANDLE EXCEPT AT A STATIC FREE WORKSTATION

ESD SENSITIVITY: CLASS 3

THIRD ANGLE PROJECTION

SCALE 3 : 1

DO NOT SCALE PRINT

UNLESS OTHERWISE SPECIFIED TOLERANCES ARE

NO PLACE	(0)	±1
ONE PLACE	(0.0)	±0.4
TWO PLACE	(0.00)	±0.15
ANGLES		±

WEIGHT

X102390-GT
REPLACES DR-5007
RELEASE NO.
CATALOG LISTING 3GC401
PAGE 1 OF 1
ISSUE 3
CHECK
REVISIONS
A PR-23276 KAG 22 JAN 98
B CO 96148 GRT 3 APR 00
CHECK
CHECK
CHECK
21 NOV 97
DRAWN WJC
PTC/CAD