REV.	MODIFICATION.	DATE	DRN
01	CO 2010734	16/07/09	TC
02	CO 2011186	16/08/11	SF

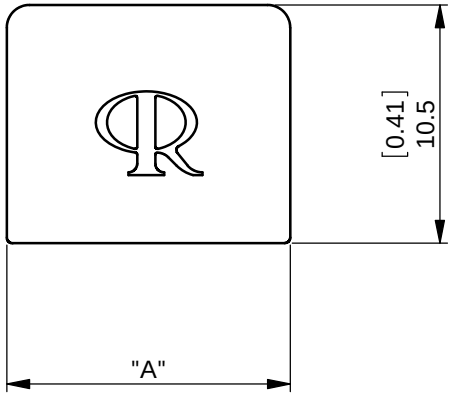

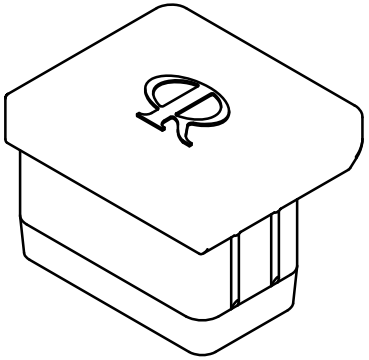

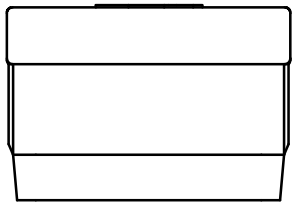

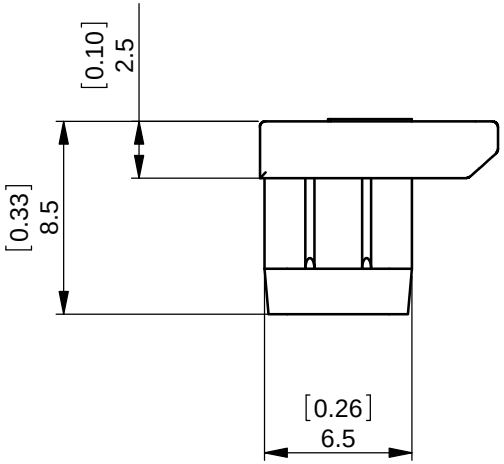

ALTERNATE UNITS FOR REFERENCE ONLY

PART No	MATERIAL	Dim "A"	TO ACCOMODATE:
CP-RJ11	SILICONE RUBBER - 70 SHORE A (RMS-383)	10.5 [0.41]	RJ11 Connector
CP-RJ11-427	EPDM RUBBER - 70 SHORE A (RMS-427)		
CP-RJ45	SILICONE RUBBER - 70 SHORE A (RMS-383)	12.5 [0.49]	RJ45 Connector
CP-RJ45-427	EPDM RUBBER - 70 SHORE A (RMS-427)		

INFORMATION CONTAINED IN THIS DOCUMENT IS CONFIDENTIAL TO RICHCO INTERNATIONAL Co. Ltd. AND MAY NOT BE DISCLOSED OR REPRODUCED IN WHOLE OR PART WITHOUT THEIR WRITTEN CONSENT.

RICHCO, INC.
WWW.RICHCO-INC.COM

ALL DIMENSIONS IN mm
GENERAL TOLERANCES ±0.25
UNLESS OTHERWISE STATED
1 DECIMAL PLACE ± 0.25
2 DECIMAL PLACES ± 0.10
ANGULAR ±1°

THIRD ANGLE

MATERIAL: SEE TABLE				COLOUR: BLACK	
DESCRIPTION: CONNECTOR PLUG				PART No: SEE TABLE	
DRG No: 09-073		NPR No: GB08-0150 - RJ11 GB08-0003 - RJ45		SHEET SIZE A4	
DRN TC	DATE 16/07/09	CHKD JK	DATE 16/07/09	SCALE NTS	SHEET No. 1 OF 1

FORM No. 0143/00