THIS DRAWING IS UNPUBLISHED. RELEASED FOR PUBLICATION -,- .
© COPYRIGHT - By - ALL RIGHTS RESERVED.

LOC	DIST
GP	00

REVISIONS

P	LTR	DESCRIPTION	DATE	DWN	APVD
	N	REVISED PER ECO-11-020101	10APR2012	CJV	CWR

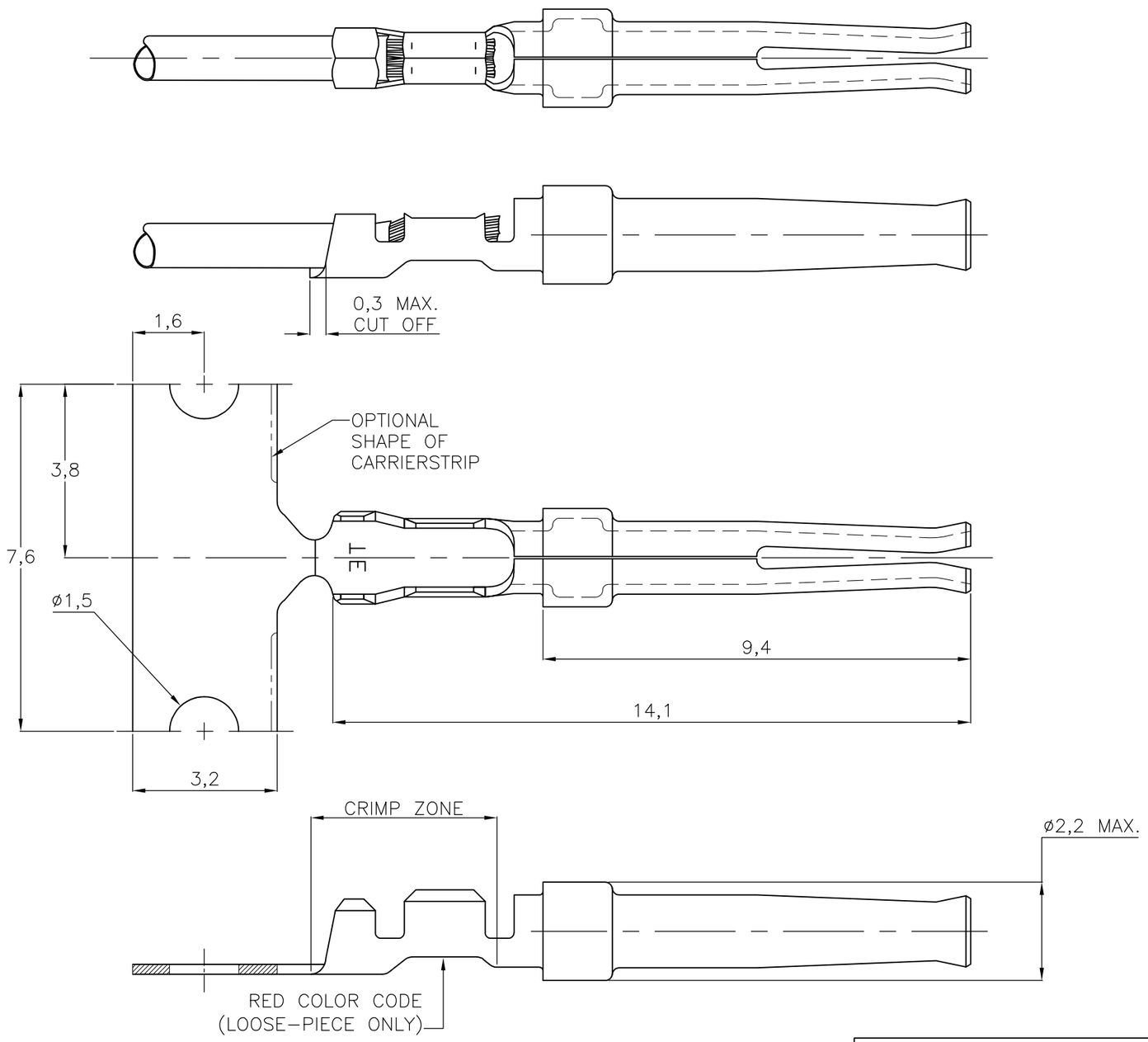

NOTES:

1. FOR MINI-APPLICATOR-12500 PCS REEL.
2. FOR REEL-FEED HAND TOOLING-500 PCS REEL.
3. FOR HAND TOOLING- LOOSE PIECE.
4. MATERIAL: PHOSPHORBRONZE.
5. FINISH:
   - Ni UNDERPLATING ALL OVER.
   - CONTACT AREA PLATING MEETS IEC-807-3 PERFORMANCE LEVEL 2.
   - CRIMP ZONE Sn PLATED.

WIRE RANGE: 24-20 AWG(0,56-0,20mm²)
INSUL. RANGE: 1,27-1,52 DIA

5	166291-1	5-166051-1	166051-1
FINISH	LOOSE-PIECE 3	PART NUMBER 2	PART NUMBER 1

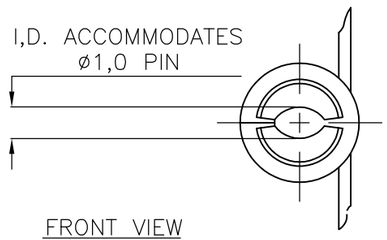

FRONT VIEW

THIS DRAWING IS A CONTROLLED DOCUMENT.
DIMENSIONING AND TOLERANCING PER ASME Y14.5M-2009

DIMENSIONS: mm	TOLERANCES UNLESS OTHERWISE SPECIFIED:
	0 PLC ± -
	1 PLC ± 0,127
	2 PLC ± -
	3 PLC ± -
	4 PLC ± -
	ANGLES ± -
MATERIAL -	FINISH -

DWN -		
CHK K.MALCZYK	21AUG08	
APVD T.DE BOER	21AUG08	
PRODUCT SPEC 108-40005		
APPLICATION SPEC 114-10000		
WEIGHT -		

TE Connectivity

NAME: SOCKET CONTACT, SIZE 20 DF. -

SIZE	CAGE CODE	DRAWING NO	RESTRICTED TO
A3	00779	C-166051	-

CUSTOMER DRAWING | SCALE NTS | SHEET 1 OF 1 | REV N