THIS DRAWING IS UNPUBLISHED. RELEASED FOR PUBLICATION -,- .
© COPYRIGHT - By - ALL RIGHTS RESERVED.

REVISIONS

P	LTR	DESCRIPTION	DATE	DWN	APVD
	B2	REVISED PER ECR-16-013146	19SEP2016	BW	DC

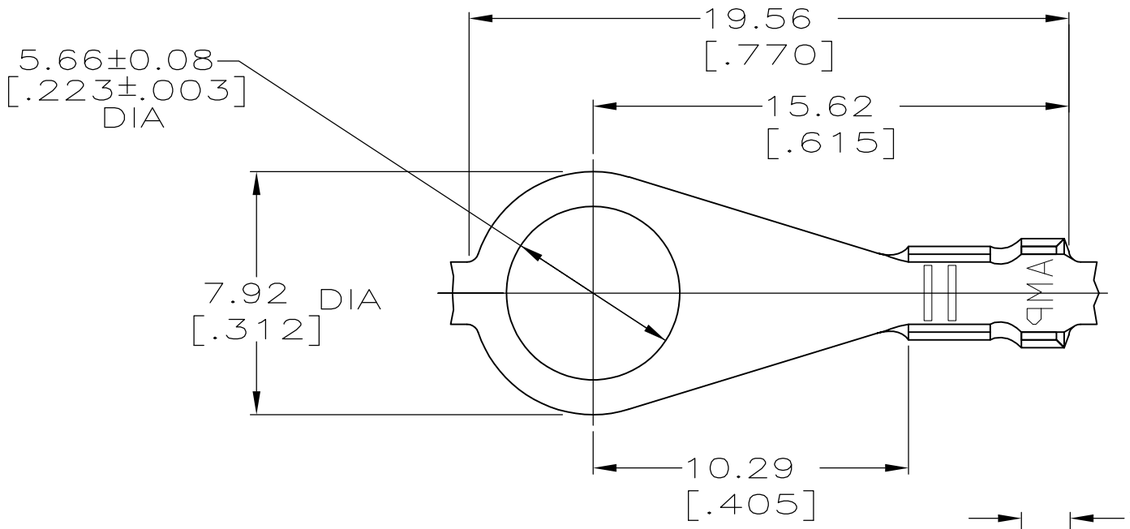

1. CONTINUOUS STRIP ON REEL.

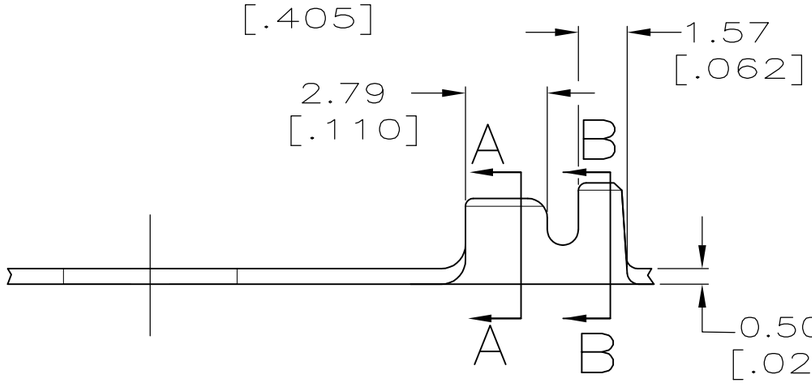

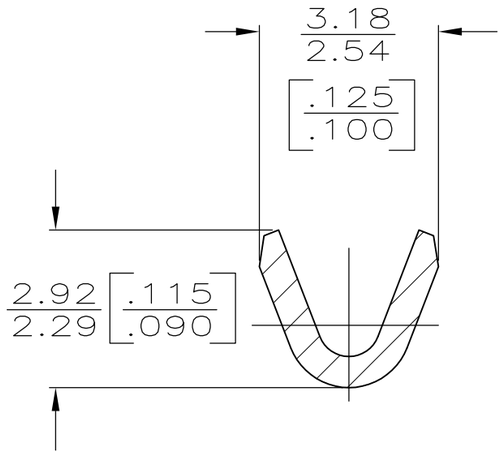

SECTION A–A
SCALE 10:1

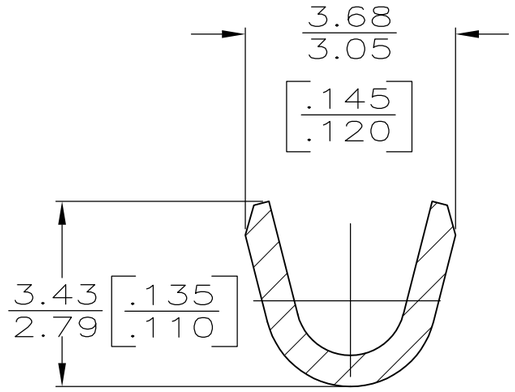

SECTION B–B
SCALE 10:1

1.22–1.98 DIA [.048–.078]	0.2 – 0.6mm² [24–20] AWG	63721–1
INSULATION RANGE	WIRE RANGE	PART NO

0	.090	2.29 [.090]	4.32 [.170]	F	2.03 [.080]	1.40 [.055]	0.6mm² [20]
F	.100					1.35 [.053]	0.3mm² [22]
						1.27 [.050]	0.2mm² [24]
TYPE		WIDTH	STRIP LENGTH ±0.38 [±.015]	TYPE	WIDTH	±0.051 [±.002] HEIGHT	WIRE
INSUL BARREL CRIMP				WIRE BARREL CRIMP			

THIS DRAWING IS A CONTROLLED DOCUMENT.

DIMENSIONS: mm [INCHES]

TOLERANCES UNLESS OTHERWISE SPECIFIED:
0 PLC ± –
1 PLC ± –
2 PLC ± 0.25 [.010]
3 PLC ± –
4 PLC ± –
ANGLES ± –

MATERIAL: #2 HARD BRASS
FINISH: TIN

DWN P FORTNEY	8/3/93	TE Connectivity
CHK JR RUTH	8/3/93	
APVD G YETTER	8/3/93	NAME: RING
PRODUCT SPEC —		
APPLICATION SPEC —		SIZE A3 / CAGE CODE 00779 / DRAWING NO C-63721 / RESTRICTED TO —
WEIGHT 0.000000		
CUSTOMER DRAWING		SCALE 5:1 / SHEET 1 OF 1 / REV B2

1470-19 (1/15)