# Micron Serial NOR Flash Memory

## 1.8V, Multiple I/O, 4KB Sector Erase
## N25Q128A

## Features

- SPI-compatible serial bus interface
- 108 MHz (MAX) clock frequency
- 1.7–2.0V single supply voltage
- Dual/quad I/O instruction provides increased throughput up to 432 MHz
- Supported protocols
  - Extended SPI, dual I/O, and quad I/O
- Execute-in-place (XIP) mode for all three protocols
  - Configurable via volatile or nonvolatile registers
  - Enables memory to work in XIP mode directly after power-on
- PROGRAM/ERASE SUSPEND operations
- Continuous read of entire memory via a single command
  - Fast read
  - Quad or dual output fast read
  - Quad or dual I/O fast read
- Flexible to fit application
  - Configurable number of dummy cycles
  - Output buffer configurable
- Software reset
- 64-byte, user-lockable, one-time programmable (OTP) dedicated area
- Erase capability
  - Subsector erase 4KB uniform granularity blocks
  - Sector erase 64KB uniform granularity blocks
  - Full-chip erase
- Write protection
  - Software write protection applicable to every 64KB sector via volatile lock bit
  - Hardware write protection: protected area size defined by five nonvolatile bits (BP0, BP1, BP2, BP3, and TB)
  - Additional smart protections, available upon request
- Electronic signature
  - JEDEC-standard 2-byte signature (BB18h)
  - Unique ID code (UID): 17 read-only bytes, including:
    - Two additional extended device ID (EDID) bytes to identify device factory options
    - Customized factory data (14 bytes)
- Minimum 100,000 ERASE cycles per sector
- More than 20 years data retention
- Packages JEDEC standard, all RoHS compliant
  - F7 = V-PDFN-8 6mm x 5mm Sawn (MLP8 6mm x 5mm)
  - F8 = V-PDFN-8 8mm x 6mm (MLP8 8mm x 6mm)
  - 12 = T-PBGA-24b05 6mm x 8mm
  - SF = SOP2-16 300 mils body width (SO16W)
  - SE = SOP2-8 208 mils body width (SO8W)


Micron Technology, Inc. reserves the right to change products or specifications without notice.
© 2012 Micron Technology, Inc. All rights reserved.
Products and specifications discussed herein are subject to change by Micron without notice.

# Contents

Device Description ..... 6
Features ..... 6
Operating Protocols ..... 6
XIP Mode ..... 6
Device Configurability ..... 7
Signal Assignments ..... 8
Signal Descriptions ..... 10
Memory Organization ..... 12
Memory Configuration and Block Diagram ..... 12
Memory Map – 128Mb Density ..... 13
Device Protection ..... 14
Serial Peripheral Interface Modes ..... 17
SPI Protocols ..... 19
Nonvolatile and Volatile Registers ..... 20
Status Register ..... 21
Nonvolatile and Volatile Configuration Registers ..... 22
Enhanced Volatile Configuration Register ..... 25
Flag Status Register ..... 26
Command Definitions ..... 28
READ REGISTER and WRITE REGISTER Operations ..... 30
READ STATUS REGISTER or FLAG STATUS REGISTER Command ..... 30
READ NONVOLATILE CONFIGURATION REGISTER Command ..... 30
READ VOLATILE or ENHANCED VOLATILE CONFIGURATION REGISTER Command ..... 31
WRITE STATUS REGISTER Command ..... 31
WRITE NONVOLATILE CONFIGURATION REGISTER Command ..... 32
WRITE VOLATILE or ENHANCED VOLATILE CONFIGURATION REGISTER Command ..... 32
READ LOCK REGISTER Command ..... 33
WRITE LOCK REGISTER Command ..... 34
CLEAR FLAG STATUS REGISTER Command ..... 35
READ IDENTIFICATION Operations ..... 36
READ ID and MULTIPLE I/O READ ID Commands ..... 36
READ SERIAL FLASH DISCOVERY PARAMETER Command ..... 37
READ MEMORY Operations ..... 40
PROGRAM Operations ..... 44
WRITE Operations ..... 49
WRITE ENABLE Command ..... 49
WRITE DISABLE Command ..... 49
ERASE Operations ..... 51
SUBSECTOR ERASE Command ..... 51
SECTOR ERASE Command ..... 51
BULK ERASE Command ..... 52
PROGRAM/ERASE SUSPEND Command ..... 53
PROGRAM/ERASE RESUME Command ..... 55
RESET Operations ..... 56
RESET ENABLE and RESET MEMORY Command ..... 56
RESET Conditions ..... 56
ONE TIME PROGRAMMABLE Operations ..... 57
READ OTP ARRAY Command ..... 57
PROGRAM OTP ARRAY Command ..... 57
XIP Mode ..... 60


Micron Technology, Inc. reserves the right to change products or specifications without notice.
© 2012 Micron Technology, Inc. All rights reserved.

Activate or Terminate XIP Using Volatile Configuration Register ..... 60
Activate or Terminate XIP Using Nonvolatile Configuration Register ..... 60
Confirmation Bit Settings Required to Activate or Terminate XIP ..... 61
Terminating XIP After a Controller and Memory Reset ..... 62
Power-Up and Power-Down ..... 63
Power-Up and Power-Down Requirements ..... 63
Power Loss Rescue Sequence ..... 64
AC Reset Specifications ..... 65
Absolute Ratings and Operating Conditions ..... 70
DC Characteristics and Operating Conditions ..... 72
AC Characteristics and Operating Conditions ..... 73
Package Dimensions ..... 75
Part Number Ordering Information ..... 80
Revision History ..... 82
Rev. O – 2/2014 ..... 82
Rev. N – 1/2014 ..... 82
Rev. M – 6/2013 ..... 82
Rev. L – 1/2013 ..... 82
Rev. K – 6/2012 ..... 82
Rev. J – 2/2012 ..... 82
Rev. I – 12/2011 ..... 82
Rev. H – 8/2011 ..... 82
Rev. G – 7/2011 ..... 82
Rev. F – 2/2011 ..... 82
Rev. E – 1/2011 ..... 82
Rev. D – 10/2010 ..... 83
Rev. C – 2/2010 ..... 83
Rev. B – 5/2009 ..... 83
Rev. A – 1/2009 ..... 83


Micron Technology, Inc. reserves the right to change products or specifications without notice.
© 2012 Micron Technology, Inc. All rights reserved.

## List of Figures

Figure 1: Logic Diagram ..... 7
Figure 2: 8-Pin, VDFPN8 – MLP8 and SOP2 – SO8W (Top View) ..... 8
Figure 3: 16-Pin, Plastic Small Outline – SO16 (Top View) ..... 8
Figure 4: 24-Ball TBGA (Balls Down) ..... 9
Figure 5: Block Diagram ..... 12
Figure 6: Bus Master and Memory Devices on the SPI Bus ..... 18
Figure 7: SPI Modes ..... 18
Figure 8: Internal Configuration Register ..... 20
Figure 9: READ REGISTER Command ..... 30
Figure 10: WRITE REGISTER Command ..... 32
Figure 11: READ LOCK REGISTER Command ..... 34
Figure 12: WRITE LOCK REGISTER Command ..... 35
Figure 13: READ ID and MULTIPLE I/O Read ID Commands ..... 37
Figure 14: READ Command ..... 41
Figure 15: FAST READ Command ..... 41
Figure 16: DUAL OUTPUT FAST READ ..... 42
Figure 17: DUAL INPUT/OUTPUT FAST READ Command ..... 42
Figure 18: QUAD OUTPUT FAST READ Command ..... 43
Figure 19: QUAD INPUT/OUTPUT FAST READ Command ..... 43
Figure 20: PAGE PROGRAM Command ..... 45
Figure 21: DUAL INPUT FAST PROGRAM Command ..... 46
Figure 22: EXTENDED DUAL INPUT FAST PROGRAM Command ..... 46
Figure 23: QUAD INPUT FAST PROGRAM Command ..... 47
Figure 24: EXTENDED QUAD INPUT FAST PROGRAM Command ..... 48
Figure 25: WRITE ENABLE and WRITE DISABLE Command Sequence ..... 50
Figure 26: SUBSECTOR and SECTOR ERASE Command ..... 52
Figure 27: BULK ERASE Command ..... 53
Figure 28: RESET ENABLE and RESET MEMORY Command ..... 56
Figure 29: READ OTP Command ..... 57
Figure 30: PROGRAM OTP Command ..... 59
Figure 31: XIP Mode Directly After Power-On ..... 61
Figure 32: Power-Up Timing ..... 63
Figure 33: Reset AC Timing During PROGRAM or ERASE Cycle ..... 66
Figure 34: Reset Enable ..... 66
Figure 35: Serial Input Timing ..... 66
Figure 36: Write Protect Setup and Hold During WRITE STATUS REGISTER Operation (SRWD = 1) ..... 67
Figure 37: Hold Timing ..... 68
Figure 38: Output Timing ..... 68
Figure 39: $V_{PPH}$ Timing ..... 69
Figure 40: AC Timing Input/Output Reference Levels ..... 71
Figure 41: V-PDFN-8 6mm x 5mm Sawn (MLP8) – Package Code: F7 ..... 75
Figure 42: V-PDFN-8 8mm x 6mm (MLP8) – Package Code: F8 ..... 76
Figure 43: T-PBGA-24b05 6mm x 8mm – Package Code: 12 ..... 77
Figure 44: SOP2-16 (300 mils body width) – Package Code: SF ..... 78
Figure 45: SOP2-8 (208 mils body width) – Package Code: SE ..... 79


Micron Technology, Inc. reserves the right to change products or specifications without notice.
© 2012 Micron Technology, Inc. All rights reserved.

## List of Tables

Table 1: Signal Descriptions ..... 10
Table 2: Sectors[255:0] ..... 13
Table 3: Data Protection using Device Protocols ..... 14
Table 4: Memory Sector Protection Truth Table ..... 14
Table 5: Protected Area Sizes – Upper Area ..... 14
Table 6: Protected Area Sizes – Lower Area ..... 15
Table 7: SPI Modes ..... 17
Table 8: Extended, Dual, and Quad SPI Protocols ..... 19
Table 9: Status Register Bit Definitions ..... 21
Table 10: Nonvolatile Configuration Register Bit Definitions ..... 22
Table 11: Volatile Configuration Register Bit Definitions ..... 23
Table 12: Sequence of Bytes During Wrap ..... 25
Table 13: Supported Clock Frequencies ..... 25
Table 14: Enhanced Volatile Configuration Register Bit Definitions ..... 25
Table 15: Flag Status Register Bit Definitions ..... 26
Table 16: Command Set ..... 28
Table 17: Lock Register ..... 33
Table 18: Data/Address Lines for READ ID and MULTIPLE I/O READ ID Commands ..... 36
Table 19: Read ID Data Out ..... 36
Table 20: Extended Device ID, First Byte ..... 36
Table 21: Serial Flash Discovery Parameter – Header Structure ..... 38
Table 22: Parameter ID ..... 38
Table 23: Command/Address/Data Lines for READ MEMORY Commands ..... 40
Table 24: Data/Address Lines for PROGRAM Commands ..... 44
Table 25: Suspend Parameters ..... 54
Table 26: Operations Allowed/Disallowed During Device States ..... 55
Table 27: Reset Command Set ..... 56
Table 28: OTP Control Byte (Byte 64) ..... 58
Table 29: XIP Confirmation Bit ..... 61
Table 30: Effects of Running XIP in Different Protocols ..... 61
Table 31: Power-Up Timing and $V_{WI}$ Threshold ..... 64
Table 32: AC RESET Conditions ..... 65
Table 33: Absolute Ratings ..... 70
Table 34: Operating Conditions ..... 70
Table 35: Input/Output Capacitance ..... 70
Table 36: AC Timing Input/Output Conditions ..... 71
Table 37: DC Current Characteristics and Operating Conditions ..... 72
Table 38: DC Voltage Characteristics and Operating Conditions ..... 72
Table 39: AC Characteristics and Operating Conditions ..... 73
Table 40: Part Number Information ..... 80
Table 41: Package Details ..... 80


Micron Technology, Inc. reserves the right to change products or specifications without notice.
© 2012 Micron Technology, Inc. All rights reserved.

# Device Description

The N25Q is the first high-performance multiple input/output serial Flash memory device manufactured on 65nm NOR technology. It features execute-in-place (XIP) functionality, advanced write protection mechanisms, and a high-speed SPI-compatible bus interface. The innovative, high-performance, dual and quad input/output instructions enable double or quadruple the transfer bandwidth for READ and PROGRAM operations.

## Features

The memory is organized as 256 (64KB) main sectors that are further divided into 16 subsectors each (4096 subsectors in total). The memory can be erased one 4KB subsector at a time, 64KB sectors at a time, or as a whole.

The memory can be write protected by software through volatile and nonvolatile protection features, depending on the application needs. The protection granularity is of 64KB (sector granularity) for volatile protections

The device has 64 one-time programmable (OTP) bytes that can be read and programmed with the READ OTP and PROGRAM OTP commands. These 64 bytes can also be permanently locked with a PROGRAM OTP command.

The device also has the ability to pause and resume PROGRAM and ERASE cycles by using dedicated PROGRAM/ERASE SUSPEND and RESUME instructions.

## Operating Protocols

The memory can be operated with three different protocols:

- Extended SPI (standard SPI protocol upgraded with dual and quad operations)
- Dual I/O SPI
- Quad I/O SPI

The standard SPI protocol is extended and enhanced by dual and quad operations. In addition, the dual SPI and quad SPI protocols improve the data access time and throughput of a single I/O device by transmitting commands, addresses, and data across two or four data lines.

## XIP Mode

XIP mode requires only an address (no instruction) to output data, improving random access time and eliminating the need to shadow code onto RAM for fast execution.

All protocols support XIP operation. For flexibility, multiple XIP entry and exit methods are available. For applications that must enter XIP mode immediately after powering up, XIP mode can be set as the default mode through the nonvolatile configuration register bits.


Micron Technology, Inc. reserves the right to change products or specifications without notice.
© 2012 Micron Technology, Inc. All rights reserved.

## Device Configurability

The N25Q family offers additional features that are configured through the nonvolatile configuration register for default and/or nonvolatile settings. Volatile settings can be configured through the volatile and volatile-enhanced configuration registers. These configurable features include the following:

- Number of dummy cycles for the fast READ commands
- Output buffer impedance
- SPI protocol types (extended SPI, DIO-SPI, or QIO-SPI)
- Required XIP mode
- Enabling/disabling HOLD (RESET function)
- Enabling/disabling wrap mode

**Figure 1: Logic Diagram**

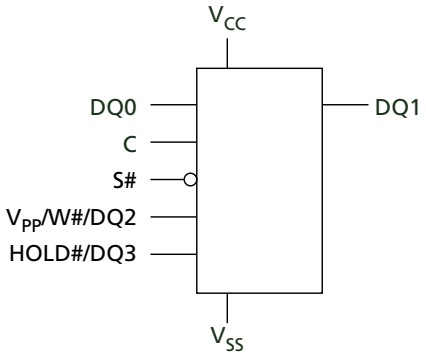


Note: 1. Reset functionality is available in devices with a dedicated part number. See Part Number Ordering Information for more details.


Micron Technology, Inc. reserves the right to change products or specifications without notice.
© 2012 Micron Technology, Inc. All rights reserved.

# Signal Assignments

**Figure 2: 8-Pin, VDFPN8 – MLP8 and SOP2 – SO8W (Top View)**

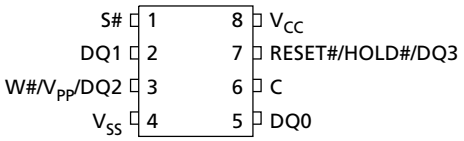


Notes:
1. On the underside of the MLP8 package, there is an exposed central pad that is pulled internally to $V_{SS}$ and must not be connected to any other voltage or signal line on the PCB.
2. Reset functionality is available in devices with a dedicated part number. See Part Number Ordering Information for complete package names and details.

**Figure 3: 16-Pin, Plastic Small Outline – SO16 (Top View)**

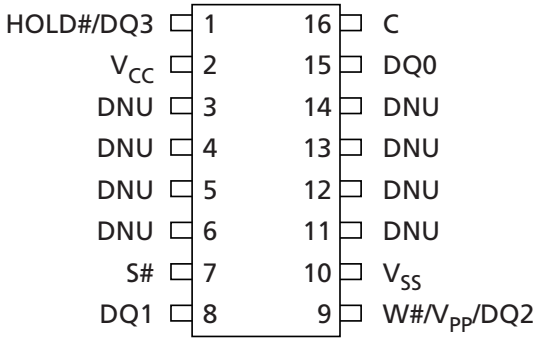


Note:
1. Reset functionality is available in devices with a dedicated part number. See Part Number Ordering Information for complete package names and details.


Micron Technology, Inc. reserves the right to change products or specifications without notice.
© 2012 Micron Technology, Inc. All rights reserved.

**Figure 4: 24-Ball TBGA (Balls Down)**

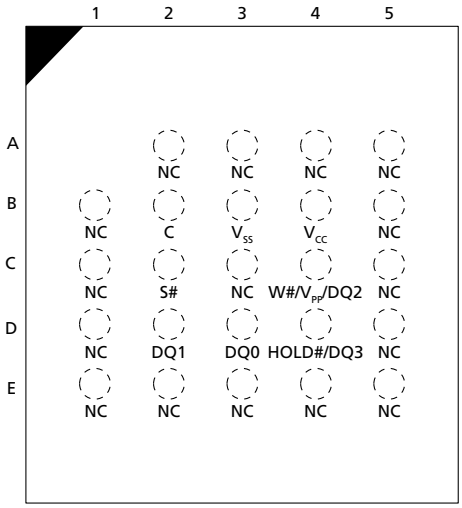


Note: 1. See Part Number Ordering Information for complete package names and details.


Micron Technology, Inc. reserves the right to change products or specifications without notice.
© 2012 Micron Technology, Inc. All rights reserved.

# Signal Descriptions

The signal description table below is a comprehensive list of signals for the N25 family devices. All signals listed may not be supported on this device. See Signal Assignments for information specific to this device.

**Table 1: Signal Descriptions**

| Symbol | Type | Description |
|---|---|---|
| C | Input | **Clock:** Provides the timing of the serial interface. Commands, addresses, or data present at serial data inputs are latched on the rising edge of the clock. Data is shifted out on the falling edge of the clock. |
| S# | Input | **Chip select:** When S# is HIGH, the device is deselected and DQ1 is at High-Z. When in extended SPI mode, with the device deselected, DQ1 is tri-stated. Unless an internal PROGRAM, ERASE, or WRITE STATUS REGISTER cycle is in progress, the device enters standby power mode (not deep power-down mode). Driving S# LOW enables the device, placing it in the active power mode. After power-up, a falling edge on S# is required prior to the start of any command. |
| DQ0 | Input and I/O | **Serial data:** Transfers data serially into the device. It receives command codes, addresses, and the data to be programmed. Values are latched on the rising edge of the clock. DQ0 is used for input/output during the following operations: DUAL OUTPUT FAST READ, QUAD OUTPUT FAST READ, DUAL INPUT/OUTPUT FAST READ, and QUAD INPUT/OUTPUT FAST READ. When used for output, data is shifted out on the falling edge of the clock.<br>In DIO-SPI, DQ0 always acts as an input/output.<br>In QIO-SPI, DQ0 always acts as an input/output, with the exception of the PROGRAM or ERASE cycle performed with $V_{PP}$. The device temporarily enters the extended SPI protocol and then returns to QIO-SPI as soon as $V_{PP}$ goes LOW. |
| DQ1 | Output and I/O | **Serial data:**Transfers data serially out of the device. Data is shifted out on the falling edge of the clock. DQ1 is used for input/output during the following operations: DUAL INPUT FAST PROGRAM, QUAD INPUT FAST PROGRAM, DUAL INPUT EXTENDED FAST PROGRAM, and QUAD INPUT EXTENDED FAST PROGRAM. When used for input, data is latched on the rising edge of the clock.<br>In DIO-SPI, DQ1 always acts as an input/output.<br>In QIO-SPI, DQ1 always acts as an input/output, with the exception of the PROGRAM or ERASE cycle performed with the enhanced program supply voltage ($V_{PP}$). In this case the device temporarily enters the extended SPI protocol and then returns to QIO-SPI as soon as $V_{PP}$ goes LOW. |
| DQ2 | Input and I/O | **DQ2:** When in QIO-SPI mode or in extended SPI mode using QUAD FAST READ commands, the signal functions as DQ2, providing input/output.<br>All data input drivers are always enabled except when used as an output. Micron recommends customers drive the data signals normally (to avoid unnecessary switching current) and float the signals before the memory device drives data on them. |
| DQ3 | Input and I/O | **DQ3:** When in quad SPI mode or in extended SPI mode using quad FAST READ commands, the signal functions as DQ3, providing input/output. HOLD# is disabled and RESET# is disabled if the device is selected. |
| RESET# | Control Input | **RESET:** This is a hardware RESET# signal. When RESET# is driven HIGH, the memory is in the normal operating mode. When RESET# is driven LOW, the memory enters reset mode and output is High-Z. If RESET# is driven LOW while an internal WRITE, PROGRAM, or ERASE operation is in progress, data may be lost. |


Micron Technology, Inc. reserves the right to change products or specifications without notice.
© 2012 Micron Technology, Inc. All rights reserved.

**Table 1: Signal Descriptions (Continued)**

| Symbol | Type | Description |
|---|---|---|
| HOLD# | Control Input | **HOLD:** Pauses any serial communications with the device without deselecting the device. DQ1 (output) is High-Z. DQ0 (input) and the clock are "Don't Care." To enable HOLD, the device must be selected with S# driven LOW.<br>HOLD# is used for input/output during the following operations: QUAD OUTPUT FAST READ, QUAD INPUT/OUTPUT FAST READ, QUAD INPUT FAST PROGRAM, and QUAD INPUT EXTENDED FAST PROGRAM.<br>In QIO-SPI, HOLD# acts as an I/O (DQ3 functionality), and the HOLD# functionality is disabled when the device is selected. When the device is deselected (S# is HIGH) in parts with RESET# functionality, it is possible to reset the device unless this functionality is not disabled by means of dedicated registers bits.<br>The HOLD# functionality can be disabled using bit 4 of the NVCR or bit 4 of the VECR.<br>On devices that include DTR mode capability, the HOLD# functionality is disabled as soon as a DTR operation is recognized. |
| W# | Control Input | **Write protect:** W# can be used as a protection control input or in QIO-SPI operations. When in extended SPI with single or dual commands, the WRITE PROTECT function is selectable by the voltage range applied to the signal. If voltage range is low (0V to $V_{CC}$), the signal acts as a write protection control input. The memory size protected against PROGRAM or ERASE operations is locked as specified in the status register block protect bits 3:0.<br>W# is used as an input/output (DQ2 functionality) during QUAD INPUT FAST READ and QUAD INPUT/OUTPUT FAST READ operations and in QIO-SPI. |
| $V_{PP}$ | Power | **Supply voltage:** If $V_{PP}$ is in the voltage range of $V_{PPH}$, the signal acts as an additional power supply, as defined in the AC Measurement Conditions table.<br>During QIFP, QIEFP, and QIO-SPI PROGRAM/ERASE operations, it is possible to use the additional $V_{PP}$ power supply to speed up internal operations. However, to enable this functionality, it is necessary to set bit 3 of the VECR to 0.<br>In this case, $V_{PP}$ is used as an I/O until the end of the operation. After the last input data is shifted in, the application should apply $V_{PP}$ voltage to $V_{PP}$ within 200ms to speed up the internal operations. If the $V_{PP}$ voltage is not applied within 200ms, the PROGRAM/ERASE operations start at standard speed.<br>The default value of VECR bit 3 is 1, and the $V_{PP}$ functionality for quad I/O modify operations is disabled. |
| $V_{CC}$ | Power | **Device core power supply:** Source voltage. |
| $V_{SS}$ | Ground | **Ground:** Reference for the $V_{CC}$ supply voltage. |
| DNU | – | Do not use. |
| NC | – | No connect. |


Micron Technology, Inc. reserves the right to change products or specifications without notice.
© 2012 Micron Technology, Inc. All rights reserved.

# Memory Organization

## Memory Configuration and Block Diagram

Each page of memory can be individually programmed. Bits are programmed from one through zero. The device is subsector, sector, or bulk-erasable, but not page-erasable. Bits are erased from zero through one. The memory is configured as 16,777,216 bytes (8 bits each); 256 sectors (64KB each); 4096 subsectors (4KB each); and 65,536 pages (256 bytes each); and 64 OTP bytes are located outside the main memory array.

**Figure 5: Block Diagram**

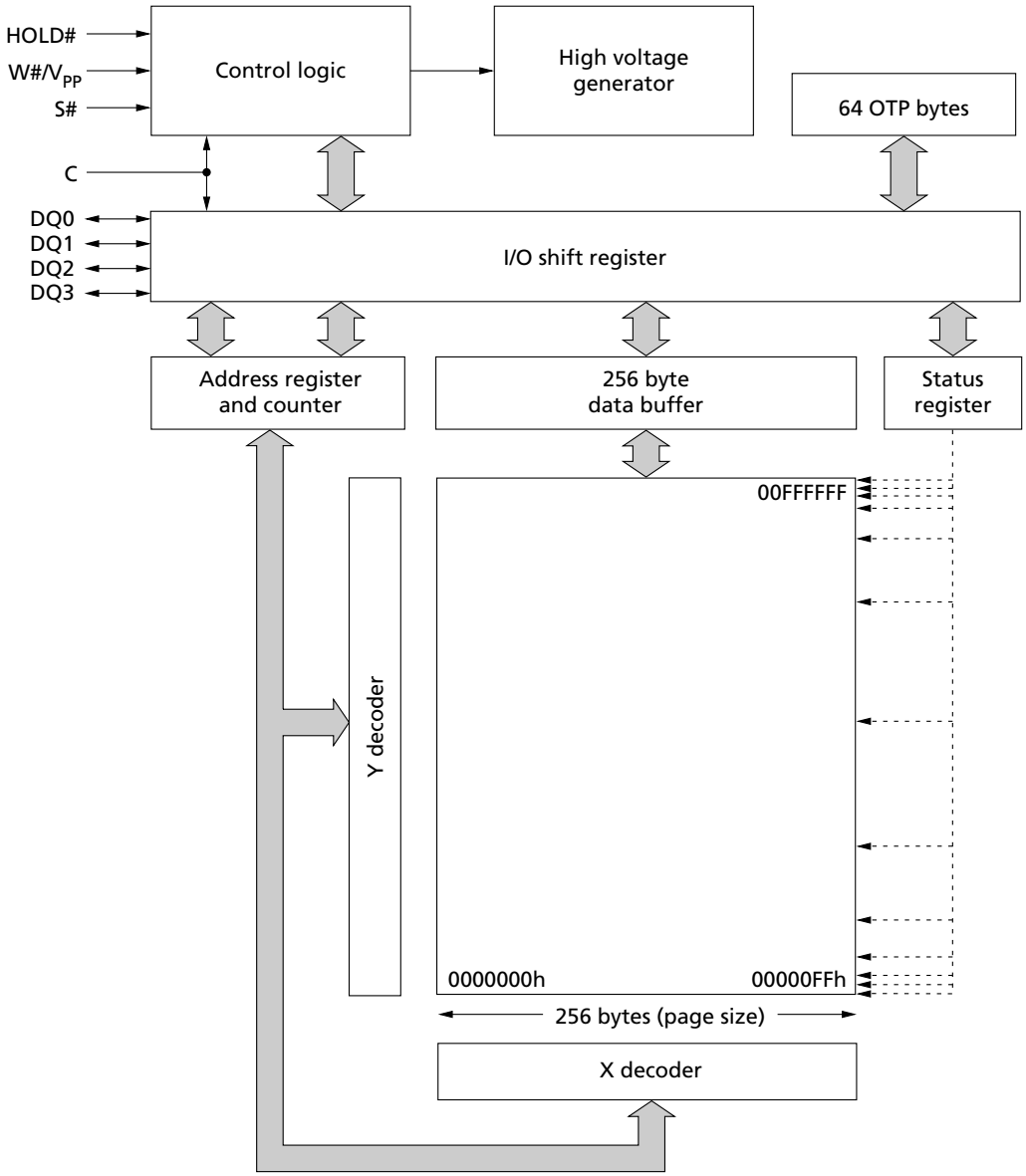



Micron Technology, Inc. reserves the right to change products or specifications without notice.
© 2012 Micron Technology, Inc. All rights reserved.

# Memory Map – 128Mb Density

**Table 2: Sectors[255:0]**

| Sector | Subsector | Address Range | |
|---|---|---|---|
| | | Start | End |
| 255 | 4095 | 00FF F000h | 00FF FFFFh |
| | ⋮ | ⋮ | ⋮ |
| | 4080 | 00FF 0000h | 00FF 0FFFh |
| ⋮ | ⋮ | ⋮ | ⋮ |
| 127 | 2047 | 007F F000h | 007F FFFFh |
| | ⋮ | ⋮ | ⋮ |
| | 2032 | 007F 0000h | 007F 0FFFh |
| ⋮ | ⋮ | ⋮ | ⋮ |
| 63 | 1023 | 003F F000h | 003F FFFFh |
| | ⋮ | ⋮ | ⋮ |
| | 1008 | 003F 0000h | 003F 0FFFh |
| ⋮ | ⋮ | ⋮ | ⋮ |
| 0 | 15 | 0000 F000h | 0000 FFFFh |
| | ⋮ | ⋮ | ⋮ |
| | 0 | 0000 0000h | 0000 0FFFh |


Micron Technology, Inc. reserves the right to change products or specifications without notice.
© 2012 Micron Technology, Inc. All rights reserved.

# Device Protection

### Table 3: Data Protection using Device Protocols

Note 1 applies to the entire table

| Protection by: | Description |
|---|---|
| Power-on reset and internal timer | Protects the device against inadvertent data changes while the power supply is outside the operating specification. |
| Command execution check | Ensures that the number of clock pulses is a multiple of one byte before executing a PROGRAM or ERASE command, or any command that writes to the device registers. |
| WRITE ENABLE operation | Ensures that commands modifying device data must be preceded by a WRITE ENABLE command, which sets the write enable latch bit in the status register. |

Note: 1. Extended, dual, and quad SPI protocol functionality ensures that device data is protected from excessive noise.

### Table 4: Memory Sector Protection Truth Table

Note 1 applies to the entire table

| Sector Lock Register | | |
|---|---|---|
| Sector Lock Down Bit | Sector Write Lock Bit | Memory Sector Protection Status |
| 0 | 0 | Sector unprotected from PROGRAM and ERASE operations. Protection status reversible. |
| 0 | 1 | Sector protected from PROGRAM and ERASE operations. Protection status reversible. |
| 1 | 0 | Sector unprotected from PROGRAM and ERASE operations. Protection status not reversible except by power cycle or reset. |
| 1 | 1 | Sector protected from PROGRAM and ERASE operations. Protection status not reversible except by power cycle or reset. |

Note: 1. Sector lock register bits are written to when the WRITE TO LOCK REGISTER command is executed. The command will not execute unless the sector lock down bit is cleared (see the WRITE TO LOCK REGISTER command). The sector lock register is programmed to have all protection registers activated at power-up.

### Table 5: Protected Area Sizes – Upper Area

Note 1 applies to the entire table

| Status Register Content | | | | | Memory Content | |
|---|---|---|---|---|---|---|
| Top/ Bottom Bit | BP3 | BP2 | BP1 | BP0 | Protected Area | Unprotected Area |
| 0 | 0 | 0 | 0 | 0 | None | All sectors |
| 0 | 0 | 0 | 0 | 1 | Upper 256th | Sectors (0 to 254) |
| 0 | 0 | 0 | 1 | 0 | Upper 128th | Sectors (0 to 253) |
| 0 | 0 | 0 | 1 | 1 | Upper 64th | Sectors (0 to 251) |
| 0 | 0 | 1 | 0 | 0 | Upper 32th | Sectors (0 to 247) |


Micron Technology, Inc. reserves the right to change products or specifications without notice.
© 2012 Micron Technology, Inc. All rights reserved.

### Table 5: Protected Area Sizes – Upper Area (Continued)

Note 1 applies to the entire table

| Status Register Content | | | | | Memory Content | |
|---|---|---|---|---|---|---|
| Top/ Bottom Bit | BP3 | BP2 | BP1 | BP0 | Protected Area | Unprotected Area |
| 0 | 0 | 1 | 0 | 1 | Upper 16nd | Sectors (0 to 239) |
| 0 | 0 | 1 | 1 | 0 | Upper 8th | Sectors (0 to 223) |
| 0 | 0 | 1 | 1 | 1 | Upper quarter | Sectors (0 to 191) |
| 0 | 1 | 0 | 0 | 0 | Upper half | Sectors (0 to 127) |
| 0 | 1 | 0 | 0 | 1 | All sectors | None |
| 0 | 1 | 0 | 1 | 0 | All sectors | None |
| 0 | 1 | 0 | 1 | 1 | All sectors | None |
| 0 | 1 | 1 | 0 | 0 | All sectors | None |
| 0 | 1 | 1 | 0 | 1 | All sectors | None |
| 0 | 1 | 1 | 1 | 0 | All sectors | None |
| 0 | 1 | 1 | 1 | 1 | All sectors | None |

Note: 1. See the Status Register for details on the top/bottom bit and the BP 3:0 bits.

### Table 6: Protected Area Sizes – Lower Area

Note 1 applies to the entire table

| Status Register Content | | | | | Memory Content | |
|---|---|---|---|---|---|---|
| Top/ Bottom Bit | BP3 | BP2 | BP1 | BP0 | Protected Area | Unprotected Area |
| 1 | 0 | 0 | 0 | 0 | None | All sectors |
| 1 | 0 | 0 | 0 | 1 | Lower 256th | Sectors (1 to 255) |
| 1 | 0 | 0 | 1 | 0 | Lower 128th | Sectors (2 to 255) |
| 1 | 0 | 0 | 1 | 1 | Lower 64th | Sectors (4 to 255) |
| 1 | 0 | 1 | 0 | 0 | Lower 32th | Sectors (8 to 255) |
| 1 | 0 | 1 | 0 | 1 | Lower 16nd | Sectors (16 to 255) |
| 1 | 0 | 1 | 1 | 0 | Lower 8th | Sectors (32 to 255) |
| 1 | 0 | 1 | 1 | 1 | Lower quarter | Sectors (64 to 255) |
| 1 | 1 | 0 | 0 | 0 | Lower half | Sectors (128 to 255) |
| 1 | 1 | 0 | 0 | 1 | All sectors | None |
| 1 | 1 | 0 | 1 | 0 | All sectors | None |
| 1 | 1 | 0 | 1 | 1 | All sectors | None |
| 1 | 1 | 1 | 0 | 0 | All sectors | None |
| 1 | 1 | 1 | 0 | 1 | All sectors | None |
| 1 | 1 | 1 | 1 | 0 | All sectors | None |


Micron Technology, Inc. reserves the right to change products or specifications without notice.
© 2012 Micron Technology, Inc. All rights reserved.

**Table 6: Protected Area Sizes – Lower Area (Continued)**

Note 1 applies to the entire table

| Status Register Content | | | | | Memory Content | |
|---|---|---|---|---|---|---|
| Top/ Bottom Bit | BP3 | BP2 | BP1 | BP0 | Protected Area | Unprotected Area |
| 1 | 1 | 1 | 1 | 1 | All sectors | None |

Note: 1. See the Status Register for details on the top/bottom bit and the BP 3:0 bits.


Micron Technology, Inc. reserves the right to change products or specifications without notice.
© 2012 Micron Technology, Inc. All rights reserved.

# Serial Peripheral Interface Modes

The device can be driven by a microcontroller while its serial peripheral interface is in either of the two modes shown here. The difference between the two modes is the clock polarity when the bus master is in standby mode and not transferring data. Input data is latched in on the rising edge of the clock, and output data is available from the falling edge of the clock.

**Table 7: SPI Modes**

Note 1 applies to the entire table

| SPI Modes | Clock Polarity |
|---|---|
| CPOL = 0, CPHA = 0 | C remains at 0 for (CPOL = 0, CPHA = 0) |
| CPOL = 1, CPHA = 1 | C remains at 1 for (CPOL = 1, CPHA = 1) |

Note: 1. The listed SPI modes are supported in extended, dual, and quad SPI protocols.

Shown below is an example of three memory devices in extended SPI protocol in a simple connection to an MCU on an SPI bus. Because only one device is selected at a time, that one device drives DQ1, while the other devices are High-Z.

Resistors ensure the device is not selected if the bus master leaves S# High-Z. The bus master might enter a state in which all input/output is High-Z simultaneously, such as when the bus master is reset. Therefore, the serial clock must be connected to an external pull-down resistor so that S# is pulled HIGH while the serial clock is pulled LOW. This ensures that S# and the serial clock are not HIGH simultaneously and that $^{t}$SHCH is met. The typical resistor value of 100kΩ, assuming that the time constant R × Cp (Cp = parasitic capacitance of the bus line), is shorter than the time the bus master leaves the SPI bus in High-Z.

**Example:** Cp = 50pF, that is R × Cp = 5µs. The application must ensure that the bus master never leaves the SPI bus High-Z for a time period shorter than 5µs. W# and HOLD# should be driven either HIGH or LOW, as appropriate.


Micron Technology, Inc. reserves the right to change products or specifications without notice.
© 2012 Micron Technology, Inc. All rights reserved.

**Figure 6: Bus Master and Memory Devices on the SPI Bus**

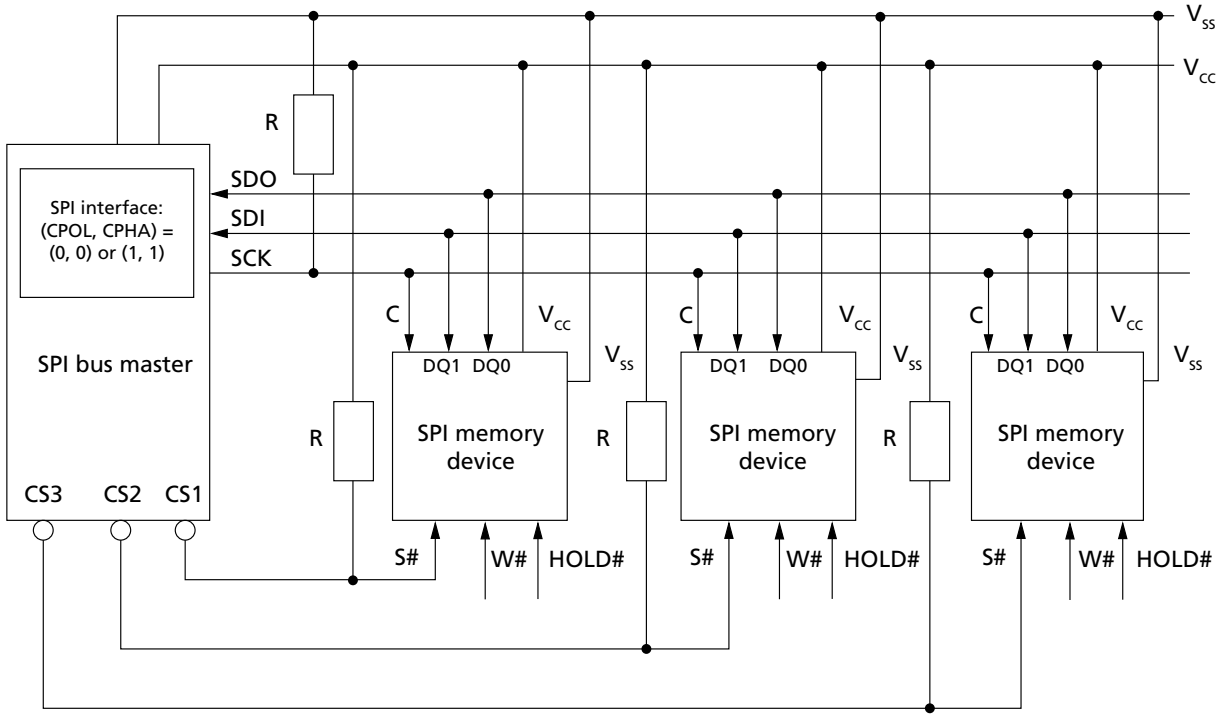


**Figure 7: SPI Modes**

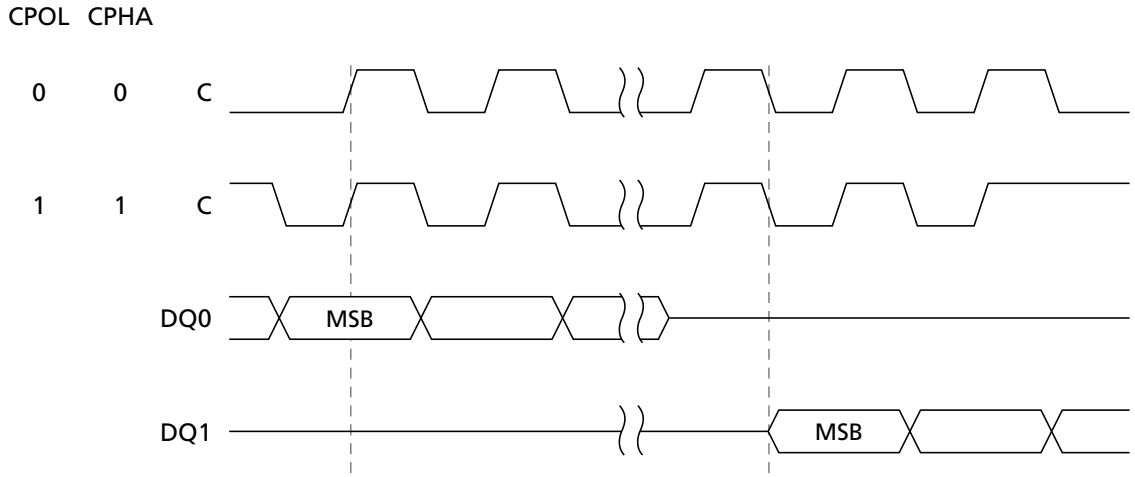



Micron Technology, Inc. reserves the right to change products or specifications without notice.
© 2012 Micron Technology, Inc. All rights reserved.

# SPI Protocols

**Table 8: Extended, Dual, and Quad SPI Protocols**

| Protocol Name | Command Input | Address Input | Data Input/Output | Description |
|---|---|---|---|---|
| Extended | DQ0 | Multiple DQ*n* lines, depending on the command | Multiple DQ*n* lines, depending on the command | Device default protocol from the factory. Additional commands extend the standard SPI protocol and enable address or data transmission on multiple DQ*n* lines. |
| Dual | DQ[1:0] | DQ[1:0] | DQ[1:0] | **Volatile selectable:** When the enhanced volatile configuration register bit 6 is set to 0 and bit 7 is set to 1, the device enters the dual SPI protocol immediately after the WRITE ENHANCED VOLATILE CONFIGURATION REGISTER command. The device returns to the default protocol after the next power-on. In addition, the device can return to default protocol using the rescue sequence or through new WRITE ENHANCED VOLATILE CONFIGURATION REGISTER command, without power-off or power-on.<br><br>**Nonvolatile selectable:** When nonvolatile configuration register bit 2 is set, the device enters the dual SPI protocol after the next power-on. Once this register bit is set, the device defaults to the dual SPI protocol after all subsequent power-on sequences until the nonvolatile configuration register bit is reset to 1. |
| Quad[1] | DQ[3:0] | DQ[3:0] | DQ[3:0] | **Volatile selectable:** When the enhanced volatile configuration register bit 7 is set to 0, the device enters the quad SPI protocol immediately after the WRITE ENHANCED VOLATILE CONFIGURATION REGISTER command. The device returns to the default protocol after the next power-on. In addition, the device can return to default protocol using the rescue sequence or through new WRITE ENHANCED VOLATILE CONFIGURATION REGISTER command, without power-off or power-on.<br><br>**Nonvolatile selectable:** When nonvolatile configuration register bit 3 is set to 0, the device enters the quad SPI protocol after the next power-on. Once this register bit is set, the device defaults to the quad SPI protocol after all subsequent power-on sequences until the nonvolatile configuration register bit is reset to 1. |

Note: 1. In quad SPI protocol, all command/address input and data I/O are transmitted on four lines except during a PROGRAM and ERASE cycle performed with $V_{PP}$. In this case, the device enters the extended SPI protocol to temporarily allow the application to perform a PROGRAM/ERASE SUSPEND operation or to check the write-in-progress bit in the status register or the program/erase controller bit in the flag status register. Then, when $V_{PP}$ goes LOW, the device returns to the quad SPI protocol.


Micron Technology, Inc. reserves the right to change products or specifications without notice.
© 2012 Micron Technology, Inc. All rights reserved.

# Nonvolatile and Volatile Registers

The device features the following volatile and nonvolatile registers that users can access to store device parameters and operating configurations:

- Status register
- Nonvolatile and volatile configuration registers
- Enhanced volatile configuration register
- Flag status register
- Lock register

**Note:** The lock register is defined in READ LOCK REGISTER Command.

In addition to these user-accessible registers, the working condition of memory is set by an internal configuration register that is not directly accessible to users. As shown below, parameters in the internal configuration register are loaded from the nonvolatile configuration register during each device boot phase or power-on reset. In this sense, then, the nonvolatile configuration register contains the default settings of memory.

Also, during the life of an application, each time a WRITE VOLATILE or ENHANCED VOLATILE CONFIGURATION REGISTER command executes to set configuration parameters in these respective registers, these new settings are copied to the internal configuration register. Therefore, memory settings can be changed in real time. However, at the next power-on reset, the memory boots according to the memory settings defined in the nonvolatile configuration register parameters.

**Figure 8: Internal Configuration Register**

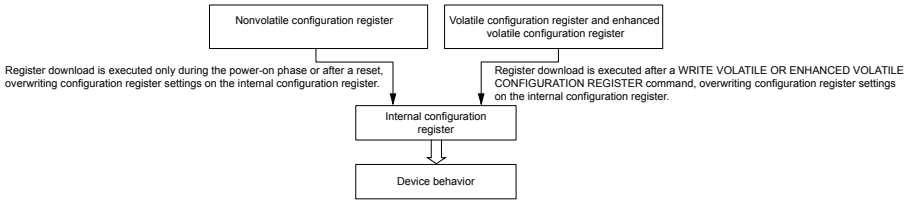



Micron Technology, Inc. reserves the right to change products or specifications without notice.
© 2012 Micron Technology, Inc. All rights reserved.

## Status Register

### Table 9: Status Register Bit Definitions

Note 1 applies to entire table

| Bit | Name | Settings | Description | Notes |
|---|---|---|---|---|
| 7 | Status register write enable/disable | 0 = Enabled<br>1 = Disabled | **Nonvolatile bit:** Used with the W#/$V_{PP}$ signal to enable or disable writing to the status register. | 2 |
| 5 | Top/bottom | 0 = Top<br>1 = Bottom | **Nonvolatile bit:** Determines whether the protected memory area defined by the block protect bits starts from the top or bottom of the memory array. | 3 |
| 6, 4:2 | Block protect 3–0 | See Protected Area Sizes – Upper Area and Lower Area tables in Device Protection | **Nonvolatile bit:** Defines memory to be software protected against PROGRAM or ERASE operations. When one or more block protect bits is set to 1, a designated memory area is protected from PROGRAM and ERASE operations. | 3 |
| 1 | Write enable latch | 0 = Cleared (Default)<br>1 = Set | **Volatile bit:** The device always powers up with this bit cleared to prevent inadvertent WRITE STATUS REGISTER, PROGRAM, or ERASE operations. To enable these operations, the WRITE ENABLE operation must be executed first to set this bit. | 4 |
| 0 | Write in progress | 0 = Ready<br>1 = Busy | **Volatile bit:** Indicates if one of the following command cycles is in progress:<br>WRITE STATUS REGISTER<br>WRITE NONVOLATILE CONFIGURATION REGISTER<br>PROGRAM<br>ERASE | 4 |

Notes:
1. Bits can be read from or written to using READ STATUS REGISTER or WRITE STATUS REGISTER commands, respectively.
2. The status register write enable/disable bit, combined with the W#/$V_{PP}$ signal as described in the Signal Descriptions, provides hardware data protection for the device as follows: When the enable/disable bit is set to 1, and the W#/$V_{PP}$ signal is driven LOW, the status register nonvolatile bits become read-only and the WRITE STATUS REGISTER operation will not execute. The only way to exit this hardware-protected mode is to drive W#/$V_{PP}$ HIGH.
3. See Protected Area Sizes tables in Device Protection. The BULK ERASE command is executed only if all bits are 0.
4. Volatile bits are cleared to 0 by a power cycle or reset.


Micron Technology, Inc. reserves the right to change products or specifications without notice.
© 2012 Micron Technology, Inc. All rights reserved.

## Nonvolatile and Volatile Configuration Registers

### Table 10: Nonvolatile Configuration Register Bit Definitions

Note 1 applies to entire table

| Bit | Name | Settings | Description | Notes |
|---|---|---|---|---|
| 15:12 | Number of dummy clock cycles | 0000 (identical to 1111)<br>0001<br>0010<br>.<br>.<br>1101<br>1110<br>1111 | Sets the number of dummy clock cycles subsequent to all FAST READ commands.<br>The default setting targets the maximum allowed frequency and guarantees backward compatibility. | 2, 3 |
| 11:9 | XIP mode at power-on reset | 000 = XIP: Fast Read<br>001 = XIP: Dual Output Fast Read<br>010 = XIP: Dual I/O Fast Read<br>011 = XIP: Quad Output Fast Read<br>100 = XIP: Quad I/O Fast Read<br>101 = Reserved<br>110 = Reserved<br>111 = Disabled (Default) | Enables the device to operate in the selected XIP mode immediately after power-on reset. | |
| 8:6 | Output driver strength | 000 = Reserved<br>001 = 90 Ohms<br>010 = 60 Ohms<br>011 = 45 Ohms<br>100 = Reserved<br>101 = 20 Ohms<br>110 = 15 Ohms<br>111 = 30 (Default) | Optimizes impedance at $V_{CC}/2$ output voltage. | |
| 5 | Reserved | X | "Don't Care." | |
| 4 | Reset/hold | 0 = Disabled<br>1 = Enabled (Default) | Enables or disables hold or reset.<br>(Available on dedicated part numbers.) | |
| 3 | Quad I/O protocol | 0 = Enabled<br>1 = Disabled (Default, Extended SPI protocol) | Enables or disables quad I/O protocol. | 4 |
| 2 | Dual I/O protocol | 0 = Enabled<br>1 = Disabled (Default, Extended SPI protocol) | Enables or disables dual I/O protocol. | 4 |
| 1:0 | Reserved | X | "Don't Care." | |
| 1:0 | Reserved | X | "Don't Care." | |
| 1 | Reserved | X | "Don't Care." | |
| 0 | Lock nonvolatile configuration register | 0 = Disabled<br>1 = Enabled (Default) | When this bit is set to 0, the nonvolatile configuration register becomes permanently write protected and any WRITE NONVOLATILE CONFIGURATION REGISTER command is ignored. | |

Notes: 1. Settings determine device memory configuration after power-on. The device ships from the factory with all bits erased to 1 (FFFFh). The register is read from or written to by


Micron Technology, Inc. reserves the right to change products or specifications without notice.
© 2012 Micron Technology, Inc. All rights reserved.

READ NONVOLATILE CONFIGURATION REGISTER or WRITE NONVOLATILE CONFIGURATION REGISTER commands, respectively.

2. The 0000 and 1111 settings are identical in that they both define the default state, which is the maximum frequency of $^{f}c$ = 108 MHz. This ensures backward compatibility.
3. If the number of dummy clock cycles is insufficient for the operating frequency, the memory reads wrong data. The number of cycles must be set according to and sufficient for the clock frequency, which varies by the type of FAST READ command, as shown in the Supported Clock Frequencies table.
4. If bits 2 and 3 are both set to 0, the device operates in quad I/O. When bits 2 or 3 are reset to 0, the device operates in dual I/O or quad I/O respectively, after the next power-on.

### Table 11: Volatile Configuration Register Bit Definitions

Note 1 applies to entire table

| Bit | Name | Settings | Description | Notes |
|---|---|---|---|---|
| 7:4 | Number of dummy clock cycles | 0000 (identical to 1111)<br>0001<br>0010<br>.<br>.<br>1101<br>1110<br>1111 | Sets the number of dummy clock cycles subsequent to all FAST READ commands.<br>The default setting targets maximum allowed frequency and guarantees backward compatibility. | 2, 3 |
| 3 | XIP | 0 = Enable<br>1 = Disable (default) | Enables or disables XIP. For device part numbers with feature digit equal to 2 or 4, this bit is always "Don't Care," so the device operates in XIP mode without setting this bit. | |
| 2 | Reserved | X = Default | 0b = Fixed value. | |
| 1:0 | Wrap | 00 = 16-byte boundary aligned | 16-byte wrap: Output data wraps within an aligned 16-byte boundary starting from the 3-byte address issued after the command code. | 4 |
| | | 01 = 32-byte boundary aligned | 32-byte wrap: Output data wraps within an aligned 32-byte boundary starting from the 3-byte address issued after the command code. | |
| | | 10 = 64-byte boundary aligned | 64-byte wrap: Output data wraps within an aligned 64-byte boundary starting from the 3-byte address issued after the command code. | |
| | | 11 = sequential (default) | Continuous reading (default): All bytes are read sequentially. | |

Notes:
1. Settings determine the device memory configuration upon a change of those settings by the WRITE VOLATILE CONFIGURATION REGISTER command. The register is read from or written to by READ VOLATILE CONFIGURATION REGISTER or WRITE VOLATILE CONFIGURATION REGISTER commands respectively.
2. The 0000 and 1111 settings are identical in that they both define the default state, which is the maximum frequency of $^{f}c$ = 108 MHz. This ensures backward compatibility.
3. If the number of dummy clock cycles is insufficient for the operating frequency, the memory reads wrong data. The number of cycles must be set according to and be sufficient for the clock frequency, which varies by the type of FAST READ command, as shown in the Supported Clock Frequencies table.


Micron Technology, Inc. reserves the right to change products or specifications without notice.
© 2012 Micron Technology, Inc. All rights reserved.

4. See the Sequence of Bytes During Wrap table.


Micron Technology, Inc. reserves the right to change products or specifications without notice.
© 2012 Micron Technology, Inc. All rights reserved.

### Table 12: Sequence of Bytes During Wrap

| Starting Address | 16-Byte Wrap | 32-Byte Wrap | 64-Byte Wrap |
|---|---|---|---|
| 0 | 0-1-2- . . . -15-0-1- . . | 0-1-2- . . . -31-0-1- . . | 0-1-2- . . . -63-0-1- . . |
| 1 | 1-2- . . . -15-0-1-2- . . | 1-2- . . . -31-0-1-2- . . | 1-2- . . . -63-0-1-2- . . |
| 15 | 15-0-1-2-3- . . . -15-0-1- . . | 15-16-17- . . . -31-0-1- . . | 15-16-17- . . . -63-0-1- . . |
| 31 | 31-16-17- . . . -31-16-17- . . | 31-0-1-2-3- . . . -31-0-1- . . | 31-32-33- . . . -63-0-1- . . |
| 63 | 63-48-49- . . . -63-48-49- . . | 63-32-33- . . . -63-32-33- . . | 63-0-1- . . . -63-0-1- . . |

### Table 13: Supported Clock Frequencies

Note 1 applies to entire table

| Number of Dummy Clock Cycles | FAST READ | DUAL OUTPUT FAST READ | DUAL I/O FAST READ | QUAD OUTPUT FAST READ | QUAD I/O FAST READ | Unit |
|---|---|---|---|---|---|---|
| 1 | 90 | 80 | 50 | 43 | 30 | MHz |
| 2 | 100 | 90 | 70 | 60 | 40 | |
| 3 | 108 | 100 | 80 | 75 | 50 | |
| 4 | 108 | 105 | 90 | 90 | 60 | |
| 5 | 108 | 108 | 100 | 100 | 70 | |
| 6 | 108 | 108 | 105 | 105 | 80 | |
| 7 | 108 | 108 | 108 | 108 | 86 | |
| 8 | 108 | 108 | 108 | 108 | 95 | |
| 9 | 108 | 108 | 108 | 108 | 105 | |
| 10 | 108 | 108 | 108 | 108 | 108 | |

Note: 1. Values are guaranteed by characterization and not 100% tested in production.

## Enhanced Volatile Configuration Register

### Table 14: Enhanced Volatile Configuration Register Bit Definitions

Note 1 applies to entire table

| Bit | Name | Settings | Description | Notes |
|---|---|---|---|---|
| 7 | Quad I/O protocol | 0 = Enabled<br>1 = Disabled (Default, extended SPI protocol) | Enables or disables quad I/O protocol. | 2 |
| 6 | Dual I/O protocol | 0 = Enabled<br>1 = Disabled (Default, extended SPI protocol) | Enables or disables dual I/O protocol. | 2 |
| 5 | Reserved | X = Default | 0b = Fixed value. | |
| 4 | Reset/hold | 0 = Disabled<br>1 = Enabled (Default) | Enables or disables hold or reset.<br>(Available on dedicated part numbers.) | |


Micron Technology, Inc. reserves the right to change products or specifications without notice.
© 2012 Micron Technology, Inc. All rights reserved.

**Table 14: Enhanced Volatile Configuration Register Bit Definitions (Continued)**

Note 1 applies to entire table

| Bit | Name | Settings | Description | Notes |
|---|---|---|---|---|
| 3 | $V_{PP}$ accelerator | 0 = Enabled<br>1 = Disabled (Default) | Enables or disables $V_{PP}$ acceleration for QUAD INPUT FAST PROGRAM and QUAD INPUT EXTENDED FAST PROGRAM OPERATIONS. | |
| 2:0 | Output driver strength | 000 = Reserved<br>001 = 90 Ohms<br>010 = 60 Ohms<br>011 = 45 Ohms<br>100 = Reserved<br>101 = 20 Ohms<br>110 = 15 Ohms<br>111 = 30 (Default) | Optimizes impedance at $V_{CC}/2$ output voltage. | |

Notes:
1. Settings determine the device memory configuration upon a change of those settings by the WRITE ENHANCED VOLATILE CONFIGURATION REGISTER command. The register is read from or written to in all protocols by READ ENHANCED VOLATILE CONFIGURATION REGISTER or WRITE ENHANCED VOLATILE CONFIGURATION REGISTER commands, respectively.
2. If bits 6 and 7 are both set to 0, the device operates in quad I/O. When either bit 6 or 7 is reset to 0, the device operates in dual I/O or quad I/O, respectively, following the next WRITE ENHANCED VOLATILE CONFIGURATION command.

## Flag Status Register

**Table 15: Flag Status Register Bit Definitions**

Note 1 applies to entire table

| Bit | Name | Settings | Description | Notes |
|---|---|---|---|---|
| 7 | Program or erase controller | 0 = Busy<br>1 = Ready | **Status bit:** Indicates whether a PROGRAM, ERASE, WRITE STATUS REGISTER, or WRITE NONVOLATILE CONFIGURATION command cycle is in progress. | 2, 3 |
| 6 | Erase suspend | 0 = Not in effect<br>1 = In effect | **Status bit:** Indicates whether an ERASE operation has been or is going to be suspended. | 3 |
| 5 | Erase | 0 = Clear<br>1 = Failure or protection error | **Error bit:** Indicates whether an ERASE operation has succeeded or failed. | 4, 5 |
| 4 | Program | 0 = Clear<br>1 = Failure or protection error | **Error bit:** Indicates whether a PROGRAM operation has succeeded or failed. Also indicates an attempt to program a 0 to a 1 when $V_{PP} = V_{PPH}$ and the data pattern is a multiple of 64 bits. | 4, 5 |
| 3 | $V_{PP}$ | 0 = Enabled<br>1 = Disabled (Default) | **Error bit:** Indicates an invalid voltage on $V_{PP}$ during a PROGRAM or ERASE operation. | 4, 5 |
| 2 | Program suspend | 0 = Not in effect<br>1 = In effect | **Status bit:** Indicates whether a PROGRAM operation has been or is going to be suspended. | 3 |


Micron Technology, Inc. reserves the right to change products or specifications without notice.
© 2012 Micron Technology, Inc. All rights reserved.

**Table 15: Flag Status Register Bit Definitions (Continued)**

Note 1 applies to entire table

| Bit | Name | Settings | Description | Notes |
|---|---|---|---|---|
| 1 | Protection | 0 = Clear<br>1 = Failure or protection error | **Error bit:** Indicates whether an ERASE or a PROGRAM operation has attempted to modify the protected array sector, or whether a PROGRAM operation has attempted to access the locked OTP space. | 4, 5 |
| 0 | Reserved | Reserved | Reserved | |

Notes:
1. Register bits are read by READ FLAG STATUS REGISTER command. All bits are volatile.
2. These program/erase controller settings apply only to PROGRAM or ERASE command cycles in progress, or to the specific WRITE command cycles in progress as shown here.
3. Status bits are reset automatically.
4. Error bits must be reset by CLEAR FLAG STATUS REGISTER command.
5. Typical errors include operation failures and protection errors caused by issuing a command before the error bit has been reset to 0.


Micron Technology, Inc. reserves the right to change products or specifications without notice.
© 2012 Micron Technology, Inc. All rights reserved.

# Command Definitions

### Table 16: Command Set

Note 1 applies to entire table

| Command | Code | Extended | Dual I/O | Quad I/O | Data Bytes | Notes |
|---|---|---|---|---|---|---|
| **RESET Operations** | | | | | | |
| RESET ENABLE | 66h | Yes | Yes | Yes | 0 | 2 |
| RESET MEMORY | 99h | | | | | |
| **IDENTIFICATION Operations** | | | | | | |
| READ ID | 9E/9Fh | Yes | No | No | 1 to 20 | 2 |
| MULTIPLE I/O READ ID | AFh | No | Yes | Yes | 1 to 3 | 2 |
| READ SERIAL FLASH DISCOVERY PARAMETER | 5Ah | Yes | Yes | Yes | 1 to ∞ | 3 |
| **READ Operations** | | | | | | |
| READ | 03h | Yes | No | No | 1 to ∞ | 4 |
| FAST READ | 0Bh | Yes | Yes | Yes | | 5 |
| DUAL OUTPUT FAST READ | 3Bh | Yes | Yes | No | 1 to ∞ | 5 |
| DUAL INPUT/OUTPUT FAST READ | 0Bh<br>3Bh<br>BBh | Yes | Yes | No | | 5, 6 |
| QUAD OUTPUT FAST READ | 6Bh | Yes | No | Yes | 1 to ∞ | 5 |
| QUAD INPUT/OUTPUT FAST READ | 0Bh<br>6Bh<br>EBh | Yes | No | Yes | | 5, 7 |
| **WRITE Operations** | | | | | | |
| WRITE ENABLE | 06h | Yes | Yes | Yes | 0 | 2 |
| WRITE DISABLE | 04h | | | | | |
| **REGISTER Operations** | | | | | | |
| READ STATUS REGISTER | 05h | Yes | Yes | Yes | 1 to ∞ | 2 |
| WRITE STATUS REGISTER | 01h | | | | 1 | 2, 8 |
| READ LOCK REGISTER | E8h | Yes | Yes | Yes | 1 to ∞ | 4 |
| WRITE LOCK REGISTER | E5h | | | | 1 | 4, 8 |
| READ FLAG STATUS REGISTER | 70h | Yes | Yes | Yes | 1 to ∞ | 2 |
| CLEAR FLAG STATUS REGISTER | 50h | | | | 0 | |
| READ NONVOLATILE CONFIGURATION REGISTER | B5h | Yes | Yes | Yes | 2 | 2 |
| WRITE NONVOLATILE CONFIGURATION REGISTER | B1h | | | | | 2, 8 |
| READ VOLATILE CONFIGURATION REGISTER | 85h | Yes | Yes | Yes | 1 to ∞ | 2 |
| WRITE VOLATILE CONFIGURATION REGISTER | 81h | | | | 1 | 2, 8 |


Micron Technology, Inc. reserves the right to change products or specifications without notice.
© 2012 Micron Technology, Inc. All rights reserved.

**Table 16: Command Set (Continued)**

Note 1 applies to entire table

| Command | Code | Extended | Dual I/O | Quad I/O | Data Bytes | Notes |
|---|---|---|---|---|---|---|
| READ ENHANCED VOLATILE CONFIGURATION REGISTER | 65h | Yes | Yes | Yes | 1 to ∞ | 2 |
| WRITE ENHANCED VOLATILE CONFIGURATION REGISTER | 61h | | | | 1 | 2, 8 |
| **PROGRAM Operations** | | | | | | |
| PAGE PROGRAM | 02h | Yes | Yes | Yes | 1 to 256 | 4, 8 |
| DUAL INPUT FAST PROGRAM | A2h | Yes | Yes | No | 1 to 256 | 4, 8 |
| EXTENDED DUAL INPUT FAST PROGRAM | 02h<br>A2h<br>D2h | Yes | Yes | No | | 4, 6, 8 |
| QUAD INPUT FAST PROGRAM | 32h | Yes | No | Yes | 1 to 256 | 4, 8 |
| EXTENDED QUAD INPUT FAST PROGRAM | 02h<br>32h<br>12h | Yes | No | Yes | | 4, 7, 8 |
| **ERASE Operations** | | | | | | |
| SUBSECTOR ERASE | 20h | Yes | Yes | Yes | 0 | 4, 8 |
| SECTOR ERASE | D8h | | | | | 4, 8 |
| BULK ERASE | C7h | | | | | 2, 8 |
| PROGRAM/ERASE RESUME | 7Ah | Yes | Yes | Yes | 0 | 2, 8 |
| PROGRAM/ERASE SUSPEND | 75h | | | | | |
| **ONE-TIME PROGRAMMABLE (OTP) Operations** | | | | | | |
| READ OTP ARRAY | 4Bh | Yes | Yes | Yes | 1 to 64 | 5 |
| PROGRAM OTP ARRAY | 42h | | | | | 4 |
| **Deep Power-Down** | | | | | | |
| Deep power-down | B9h | Yes | Yes | Yes | 0 | 2 |
| Release from deep power-down | ABh | | | | | |

Notes:
1. *Yes* in the protocol columns indicates that the command is supported and has the same functionality and command sequence as other commands marked *Yes*.
2. Address bytes = 0. Dummy clock cycles = 0.
3. Address bytes = 3. Dummy clock cycles default = 8.
4. Address bytes default = 3. Dummy clock cycles = 0.
5. Address bytes default = 3. Dummy clock cycles default = 8. Dummy clock cycles default = 10 (when quad SPI protocol is enabled). Dummy clock cycles is configurable by the user.
6. When the device is in dual SPI protocol, the command can be entered with any of these three codes. The different codes enable compatibility between dual SPI and extended SPI protocols.
7. When the device is in quad SPI protocol, the command can be entered with any of these three codes. The different codes enable compatibility between quad SPI and extended SPI protocols.
8. The WRITE ENABLE command must be issued first before this command can be executed.


Micron Technology, Inc. reserves the right to change products or specifications without notice.
© 2012 Micron Technology, Inc. All rights reserved.

# READ REGISTER and WRITE REGISTER Operations

## READ STATUS REGISTER or FLAG STATUS REGISTER Command

To initiate a READ STATUS REGISTER command, S# is driven LOW. For extended SPI protocol, the command code is input on DQ0, and output on DQ1. For dual SPI protocol, the command code is input on DQ[1:0], and output on DQ[1:0]. For quad SPI protocol, the command code is input on DQ[3:0], and is output on DQ[3:0]. The operation is terminated by driving S# HIGH at any time during data output.

The status register can be read continuously and at any time, including during a PROGRAM, ERASE, or WRITE operation.

The flag status register can be read continuously and at any time, including during an ERASE or WRITE operation.

If one of these operations is in progress, checking the write in progress bit or P/E controller bit is recommended before executing the command.

**Figure 9: READ REGISTER Command**

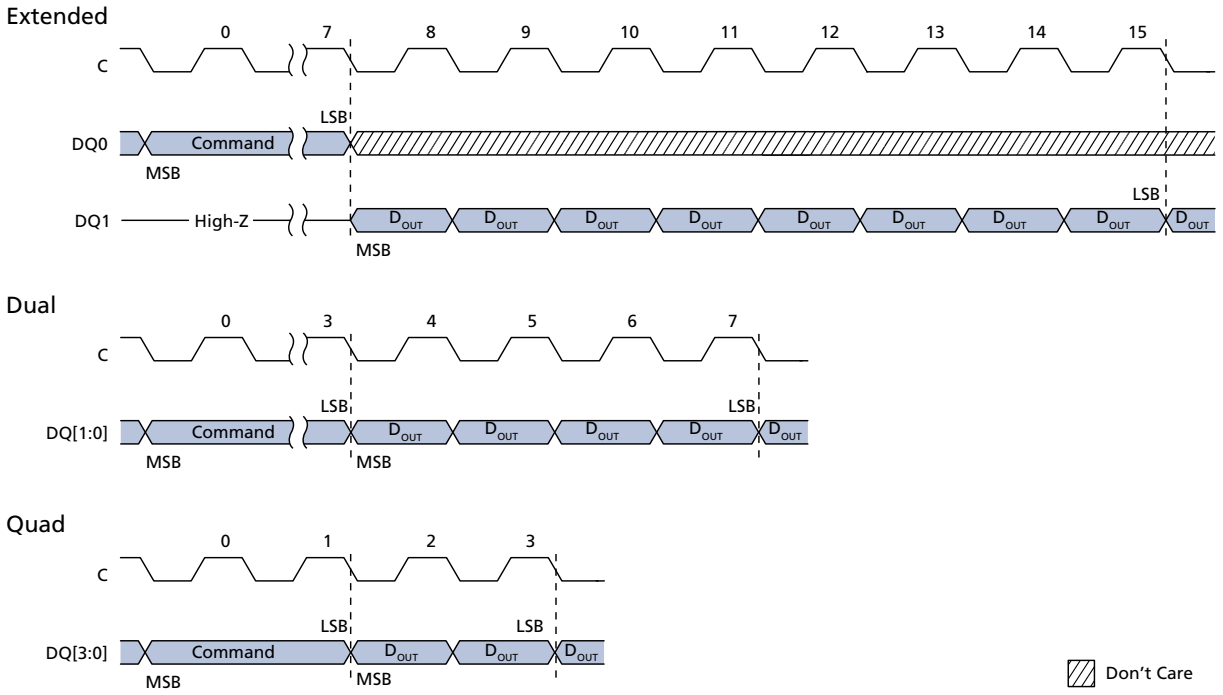


Notes: 1. Supports all READ REGISTER commands except READ LOCK REGISTER.
2. A READ NONVOLATILE CONFIGURATION REGISTER operation will output data starting from the least significant byte.

## READ NONVOLATILE CONFIGURATION REGISTER Command

To execute a READ NONVOLATILE CONFIGURATION REGISTER command, S# is driven LOW. For extended SPI protocol, the command code is input on DQ0, and output on DQ1. For dual SPI protocol, the command code is input on DQ[1:0], and output on


Micron Technology, Inc. reserves the right to change products or specifications without notice.
© 2012 Micron Technology, Inc. All rights reserved.

DQ[1:0]. For quad SPI protocol, the command code is input on DQ[3:0], and is output on DQ[3:0]. The operation is terminated by driving S# HIGH at any time during data output.

The nonvolatile configuration register can be read continuously. After all 16 bits of the register have been read, a 0 is output. All reserved fields output a value of 1.

## READ VOLATILE or ENHANCED VOLATILE CONFIGURATION REGISTER Command

To execute a READ VOLATILE CONFIGURATION REGISTER command or a READ ENHANCED VOLATILE CONFIGURATION REGISTER command, S# is driven LOW. For extended SPI protocol, the command code is input on DQ0, and output on DQ1. For dual SPI protocol, the command code is input on DQ[1:0], and output on DQ[1:0]. For quad SPI protocol, the command code is input on DQ[3:0], and is output on DQ[3:0]. The operation is terminated by driving S# HIGH at any time during data output.

When the register is read continuously, the same byte is output repeatedly.

## WRITE STATUS REGISTER Command

To issue a WRITE STATUS REGISTER command, the WRITE ENABLE command must be executed to set the write enable latch bit to 1. S# is driven LOW and held LOW until the eighth bit of the last data byte has been latched in, after which it must be driven HIGH. For extended SPI protocol, the command code is input on DQ0, followed by the data bytes. For dual SPI protocol, the command code is input on DQ[1:0], followed by the data bytes. For quad SPI protocol, the command code is input on DQ[3:0], followed by the data bytes. When S# is driven HIGH, the operation, which is self-timed, is initiated; its duration is $^{t}$W.

This command is used to write new values to status register bits 7:2, enabling software data protection. The status register can also be combined with the W#/$V_{PP}$ signal to provide hardware data protection. The WRITE STATUS REGISTER command has no effect on status register bits 1:0.

When the operation is in progress, the write in progress bit is set to 1. The write enable latch bit is cleared to 0, whether the operation is successful or not. The status register and flag status register can be polled for the operation status. When the operation completes, the write in progress bit is cleared to 0, whether the operation is successful or not.


Micron Technology, Inc. reserves the right to change products or specifications without notice.
© 2012 Micron Technology, Inc. All rights reserved.

**Figure 10: WRITE REGISTER Command**

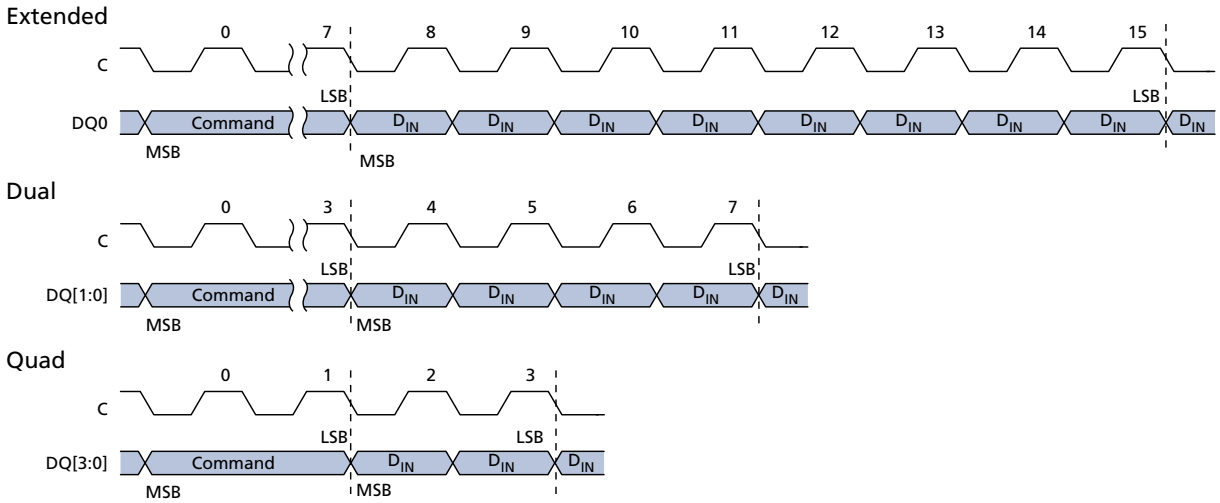


Notes:
1. Supports all WRITE REGISTER commands except WRITE LOCK REGISTER.
2. Waveform must be extended for each protocol, to 23 for extended, 11 for dual, and 5 for quad.
3. A WRITE NONVOLATILE CONFIGURATION REGISTER operation requires data being sent starting from least significant byte.

## WRITE NONVOLATILE CONFIGURATION REGISTER Command

To execute the WRITE NONVOLATILE CONFIGURATION REGISTER command, the WRITE ENABLE command must be executed to set the write enable latch bit to 1. S# is driven LOW and held LOW until the 16th bit of the last data byte has been latched in, after which it must be driven HIGH. For extended SPI protocol, the command code is input on DQ0, followed by two data bytes. For dual SPI protocol, the command code is input on DQ[1:0], followed by the data bytes. For quad SPI protocol, the command code is input on DQ[3:0], followed by the data bytes. When S# is driven HIGH, the operation, which is self-timed, is initiated; its duration is $^{t}$WNVCR.

When the operation is in progress, the write in progress bit is set to 1. The write enable latch bit is cleared to 0, whether the operation is successful or not. The status register and flag status register can be polled for the operation status. When the operation completes, the write in progress bit is cleared to 0, whether the operation is successful or not. If S# is not driven HIGH, the command is not executed, flag status register error bits are not set, and the write enable latch remains set to 1.

## WRITE VOLATILE or ENHANCED VOLATILE CONFIGURATION REGISTER Command

To execute a WRITE VOLATILE CONFIGURATION REGISTER command or a WRITE ENHANCED VOLATILE CONFIGURATION REGISTER command, the WRITE ENABLE command must be executed to set the write enable latch bit to 1. S# is driven LOW and held LOW until the eighth bit of the last data byte has been latched in, after which it must be driven HIGH. For extended SPI protocol, the command code is input on DQ0, followed by the data bytes. For dual SPI protocol, the command code is input on DQ[1:0], followed by the data bytes. For quad SPI protocol, the command code is input on DQ[3:0], followed by the data bytes.


Micron Technology, Inc. reserves the right to change products or specifications without notice.
© 2012 Micron Technology, Inc. All rights reserved.

If S# is not driven HIGH, the command is not executed, the flag status register error bits are not set and the write enable latch remains set to 1. Reserved bits are not affected by this command.

## READ LOCK REGISTER Command

To execute the READ LOCK REGISTER command, S# is driven LOW. For extended SPI protocol, the command code is input on DQ0, followed by three address bytes that point to a location in the sector. For dual SPI protocol, the command code is input on DQ[1:0]. For quad SPI protocol, the command code is input on DQ[3:0]. Each address bit is latched in during the rising edge of the clock. For extended SPI protocol, data is shifted out on DQ1 at a maximum frequency $^{f}C$ during the falling edge of the clock. For dual SPI protocol, data is shifted out on DQ[1:0], and for quad SPI protocol, data is shifted out on DQ[3:0]. The operation is terminated by driving S# HIGH at any time during data output.

When the register is read continuously, the same byte is output repeatedly. Any READ LOCK REGISTER command that is executed while an ERASE, PROGRAM, or WRITE cycle is in progress is rejected with no affect on the cycle in progress.

**Table 17: Lock Register**

Note 1 applies to entire table

| Bit | Name | Settings | Description |
|---|---|---|---|
| 7:2 | Reserved | 0 | Bit values are 0. |
| 1 | Sector lock down | 0 = Cleared (Default)<br>1 = Set | Volatile bit: the device always powers-up with this bit cleared, which means sector lock down and sector write lock bits can be set.<br>When this bit set, neither of the lock register bits can be written to until the next power cycle. |
| 0 | Sector write lock | 0 = Cleared (Default)<br>1 = Set | Volatile bit: the device always powers-up with this bit cleared, which means that PROGRAM and ERASE operations in this sector can be executed and sector content modified.<br>When this bit is set, PROGRAM and ERASE operations in this sector will not be executed. |

Note: 1. Sector lock register bits 1:0 are written to by the WRITE LOCK REGISTER command. The command will not execute unless the sector lock down bit is cleared.


Micron Technology, Inc. reserves the right to change products or specifications without notice.
© 2012 Micron Technology, Inc. All rights reserved.

**Figure 11: READ LOCK REGISTER Command**

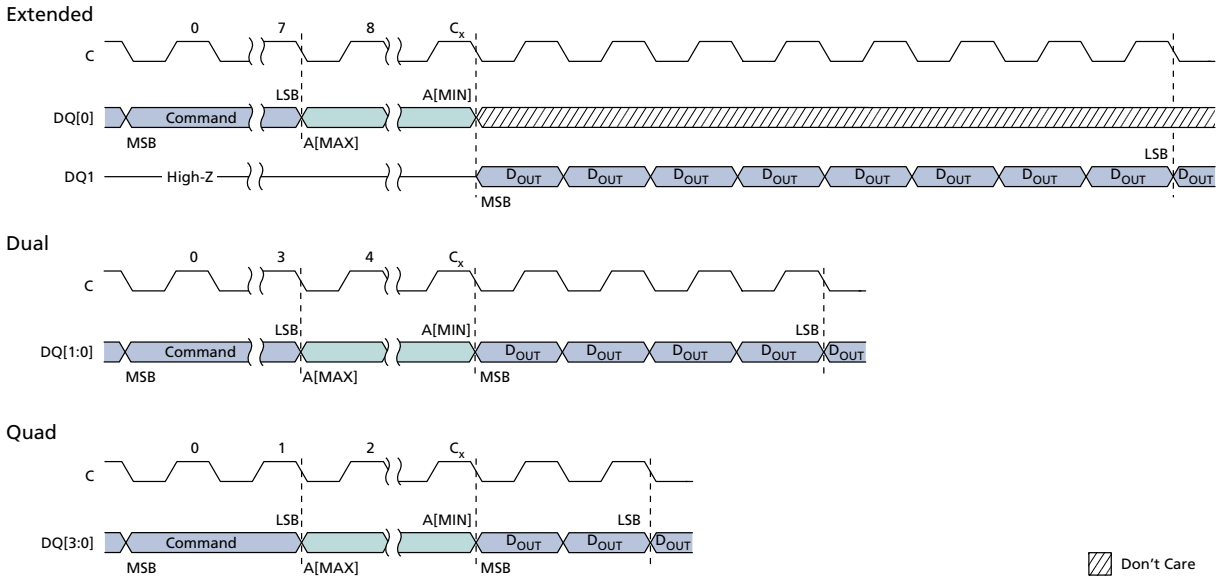


Note: 1. For extended SPI protocol, $C_x = 7 + (A[MAX] + 1)$.

For dual SPI protocol, $C_x = 3 + ((A[MAX] + 1)/2)$.

For quad SPI protocol, $C_x = 1 + ((A[MAX] + 1)/4)$.

## WRITE LOCK REGISTER Command

To initiate the WRITE LOCK REGISTER command, the WRITE ENABLE command must be executed to set the write enable latch bit to 1. S# is driven LOW and held LOW until the eighth bit of the last data byte has been latched in, after which it must be driven HIGH. The command code is input on DQn, followed by three address bytes that point to a location in the sector, and then one data byte that contains the desired settings for lock register bits 0 and 1. Each address bit is latched in during the rising edge of the clock.

When execution is complete, the write enable latch bit is cleared within $^{t}$SHSL2 and no error bits are set. Because lock register bits are volatile, change to the bits is immediate. WRITE LOCK REGISTER can be executed when an ERASE SUSPEND operation is in effect. If S# is not driven HIGH, the command is not executed, flag status register error bits are not set, and the write enable latch remains set to 1.


Micron Technology, Inc. reserves the right to change products or specifications without notice.
© 2012 Micron Technology, Inc. All rights reserved.

**Figure 12: WRITE LOCK REGISTER Command**

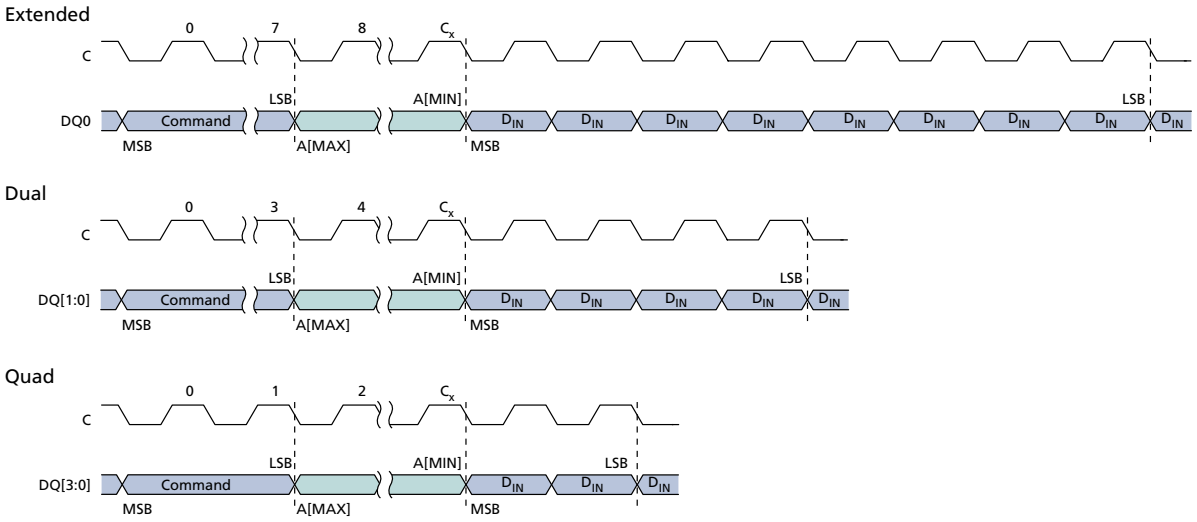


Note: 1. For extended SPI protocol, $C_x$ = 7 + (A[MAX] + 1).

For dual SPI protocol, $C_x$ = 3 + ((A[MAX] + 1)/2).

For quad SPI protocol, $C_x$ = 1 + ((A[MAX] + 1)/4).

## CLEAR FLAG STATUS REGISTER Command

To execute the CLEAR FLAG STATUS REGISTER command and reset the error bits (erase, program, and protection), S# is driven LOW. For extended SPI protocol, the command code is input on DQ0. For dual SPI protocol, the command code is input on DQ[1:0]. For quad SPI protocol, the command code is input on DQ[3:0]. The operation is terminated by driving S# HIGH at any time.


Micron Technology, Inc. reserves the right to change products or specifications without notice.
© 2012 Micron Technology, Inc. All rights reserved.

# READ IDENTIFICATION Operations

## READ ID and MULTIPLE I/O READ ID Commands

To execute the READ ID or MULTIPLE I/O READ ID commands, S# is driven LOW and the command code is input on DQ*n*. The device outputs the information shown in the tables below. If an ERASE or PROGRAM cycle is in progress when the command is executed, the command is not decoded and the command cycle in progress is not affected. When S# is driven HIGH, the device goes to standby. The operation is terminated by driving S# HIGH at any time during data output.

**Table 18: Data/Address Lines for READ ID and MULTIPLE I/O READ ID Commands**

| Command Name | Data In | Data Out | Unique ID is Output | Extended | Dual | Quad |
|---|---|---|---|---|---|---|
| READ ID | DQ0 | DQ0 | Yes | Yes | No | No |
| MULTIPLE I/O READ ID | DQ[3:0] | DQ[1:0] | No | No | Yes | Yes |

Note: 1. *Yes* in the protocol columns indicates that the command is supported and has the same functionality and command sequence as other commands marked *Yes*.

**Table 19: Read ID Data Out**

| Size (Bytes) | Name | Content Value | Assigned by |
|---|---|---|---|
| 1 | **Manufacturer ID** | 20h | JEDEC |
| 2 | **Device ID** | | |
| | Memory Type | BBh | Manufacturer |
| | Memory Capacity | 18h (128Mb) | |
| 17 | **Unique ID** | | |
| | 1 Byte: Length of data to follow | 10h | Factory |
| | 2 Bytes: Extended device ID and device configuration information | ID and information such as uniform architecture, and HOLD or RESET functionality | |
| | 14 Bytes: Customized factory data | Unique ID code (UID) (*n* read-only bytes) | |

Note: 1. The 17 bytes of information in the unique ID is read by the READ ID command, but cannot be read by the MULTIPLE I/O READ ID command.

**Table 20: Extended Device ID, First Byte**

| Bit 7 | Bit 6 | Bit 5 | Bit 4 | Bit 3 | Bit 2 | Bit 1 | Bit 0 |
|---|---|---|---|---|---|---|---|
| Reserved | Reserved | 1 = Reserved<br>0 = Standard BP scheme | Volatile configuration register, XIP bit setting:<br>0 = Required<br>1 = Not required | HOLD#/RESET#:<br>0 = HOLD<br>1 = RESET | Addressing:<br>0 = by byte | Architecture:<br>00 = Uniform | |


Micron Technology, Inc. reserves the right to change products or specifications without notice.
© 2012 Micron Technology, Inc. All rights reserved.

**Figure 13: READ ID and MULTIPLE I/O Read ID Commands**

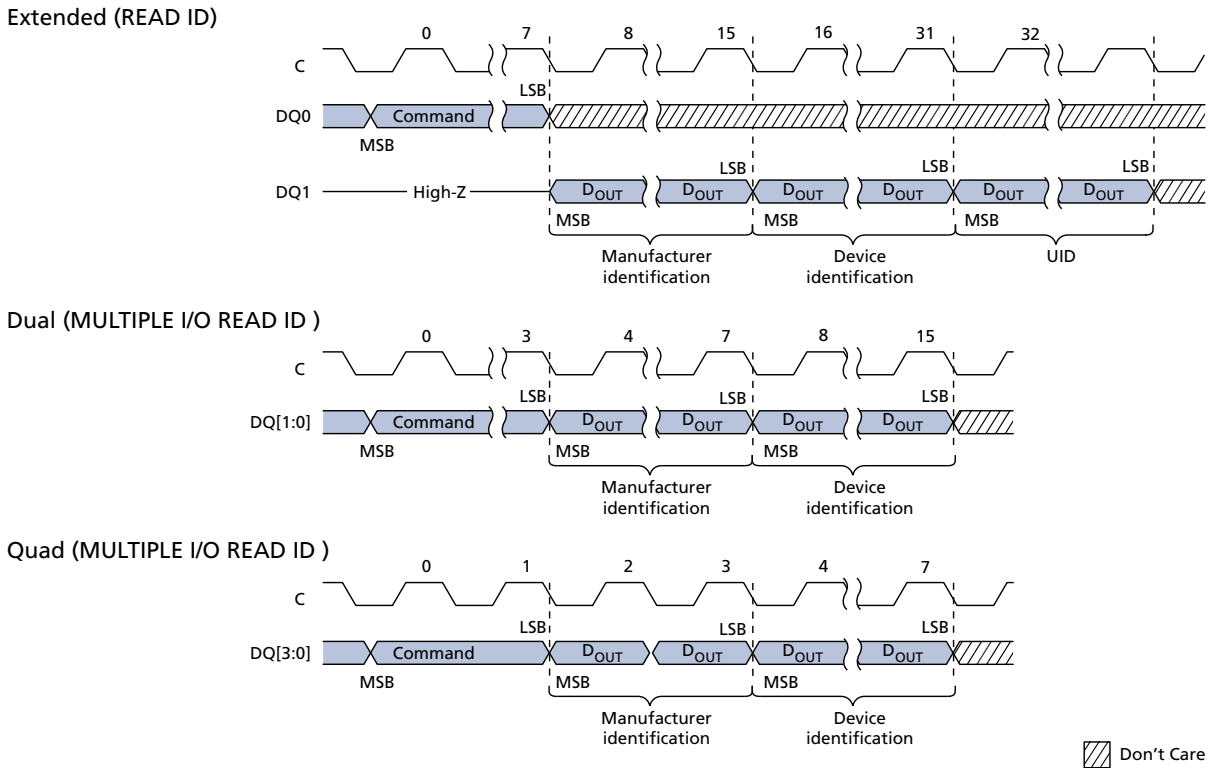


Note: 1. The READ ID command is represented by the extended SPI protocol timing shown first. The MULTIPLE I/O READ ID command is represented by the dual and quad SPI protocols are shown below extended SPI protocol.

## READ SERIAL FLASH DISCOVERY PARAMETER Command

To execute READ SERIAL FLASH DISCOVERY PARAMETER command, S# is driven LOW. The command code is input on DQ0, followed by three address bytes and 8 dummy clock cycles in extended or dual SPI protocol, 10 dummy clock cycles in quad SPI protocol. The device outputs the information starting from the specified address. When the 2048-byte boundary is reached, the data output wraps to address 0 of the serial Flash discovery parameter table. The operation is terminated by driving S# HIGH at any time during data output.

The operation always executes in continuous mode so the read burst wrap setting in the volatile configuration register does not apply.

**Note:** Data to be stored in the serial Flash discovery parameter area is still in the definition phase.


Micron Technology, Inc. reserves the right to change products or specifications without notice.
© 2012 Micron Technology, Inc. All rights reserved.

**Table 21: Serial Flash Discovery Parameter – Header Structure**

| Description | | Byte Address | Bits | Data 128Mb |
|---|---|---|---|---|
| SFDP signature | | 00h | 7:0 | 53h |
| | | 01h | 7:0 | 46h |
| | | 02h | 7:0 | 44h |
| | | 03h | 7:0 | 50h |
| SFDP revision | Minor | 04h | 7:0 | 00h |
| | Major | 05h | 7:0 | 01h |
| Number of parameter headers | | 06h | 7:0 | 00h |
| Unused | | 07h | 7:0 | FFh |
| Parameter ID (0) | | 08h | 7:0 | 00h |
| Parameter minor revision | | 09h | 7:0 | 00h |
| Parameter major revision | | 0Ah | 7:0 | 01h |
| Parameter length (in DW) | | 0Bh | 7:0 | 09h |
| Parameter table pointer | | 0Ch | 7:0 | 30h |
| | | 0Dh | 7:0 | 00h |
| | | 0Eh | 7:0 | 00h |
| Unused | | 0Fh | 7:0 | FFh |

Note: 1. Locations 10h to 2Fh contain FFh.

**Table 22: Parameter ID**

| Description | Byte Address | Bits | Data 128Mb |
|---|---|---|---|
| Minimum block/sector erase sizes | 30h | 1:0 | 01b |
| Write granularity | | 2 | 1 |
| WRITE ENABLE command required for writing to volatile status registers | | 3 | 0 |
| WRITE ENABLE command code select for writing to volatile status register | | 4 | 0 |
| Unused | | 7:5 | 111b |
| 4KB ERASE command code | 31h | 7:0 | 20h |
| Supports 1-1-2 fast read | 32h | 0 | 1 |
| Address bytes | | 2:1 | 00b |
| Supports double transfer rate clocking | | 3 | 0 |
| Supports 1-2-2 fast read | | 4 | 1 |
| Supports 1-4-4 fast read | | 5 | 1 |
| Supports 1-1-4 fast read | | 6 | 1 |
| Unused | | 7 | 1 |
| Reserved | 33h | 7:0 | FFh |


Micron Technology, Inc. reserves the right to change products or specifications without notice.
© 2012 Micron Technology, Inc. All rights reserved.

**Table 22: Parameter ID (Continued)**

| Description | Byte Address | Bits | Data 128Mb |
|---|---|---|---|
| Flash size (in bits) | 34h | 7:0 | FFh |
| | 35h | 7:0 | FFh |
| | 36h | 7:0 | FFh |
| | 37h | 7:0 | 07h |
| 1-4-4 FAST READ DUMMY cycle count | 38h | 4:0 | 01001b |
| 1-4-4 fast read number of mode bits | | 7:5 | 001b |
| 1-4-4 FAST READ command code | 39h | 7:0 | EBh |
| 1-1-4 FAST READ DUMMY cycle count | 3Ah | 4:0 | 00111b |
| 1-1-4 fast read number of mode bits | | 7:5 | 001b |
| 1-1-4 FAST READ command code | 3Bh | 7:0 | 6Bh |
| 1-1-2 FAST READ DUMMY cycle count | 3Ch | 4:0 | 01000b |
| 1-1-2 fast read number of mode bits | | 7:5 | 000b |
| 1-1-2 FAST READ command code | 3Dh | 7:0 | 3Bh |
| 1-2-2 FAST READ DUMMY cycle count | 3Eh | 4:0 | 00111b |
| 1-2-2 fast read number of mode bits | | 7:5 | 001b |
| 1-2-2 Instruction opcode | 3Fh | 7:0 | BBh |
| Supports 2-2-2 fast read | 40h | 0 | 1 |
| Reserved | | 3:1 | 111b |
| Supports 4-4-4 fast read | | 4 | 1 |
| Reserved | | 7:5 | 111b |
| Reserved | 43:41h | FFFFFFh | FFFFFFh |
| Reserved | 45:44h | FFFFh | FFFFh |
| 2-2-2 FAST READ DUMMY cycle count | 46h | 4:0 | 01000b |
| 2-2-2 fast read number of mode bits | | 7:5 | 001b |
| 2-2-2 FAST READ command code | 47h | 7:0 | BBh |
| Reserved | 49:48h | FFFFh | FFFFh |
| 4-4-4 FAST READ DUMMY cycle count | 4Ah | 4:0 | 01010b |
| 4-4-4 fast read number of mode bits | | 7:5 | 001b |
| 4-4-4 FAST READ command code | 4Bh | 7:0 | EBh |
| Sector type 1 size | 4Ch | 7:0 | 0Ch |
| Sector type 1 command code | 4Dh | 7:0 | 20h |
| Sector type 2 size | 4Eh | 7:0 | 10h |
| Sector type 2 command code | 4Fh | 7:0 | D8h |
| Sector type 3 size | 50h | 7:0 | 00h |
| Sector type 3 command code | 51h | 7:0 | 00h |
| Sector type 4 size | 52h | 7:0 | 00h |
| Sector type 4 command code | 53h | 7:0 | 00h |


Micron Technology, Inc. reserves the right to change products or specifications without notice.
© 2012 Micron Technology, Inc. All rights reserved.

# READ MEMORY Operations

The device supports default reading and writing to an A[MAX:MIN] of A[23:0].

To execute READ MEMORY commands, S# is driven LOW. The command code is input on DQ*n*, followed by input on DQ*n* of three address bytes. Each address bit is latched in during the rising edge of the clock. The addressed byte can be at any location, and the address automatically increments to the next address after each byte of data is shifted out; therefore, the entire memory can be read with a single command. The operation is terminated by driving S# HIGH at any time during data output.

**Table 23: Command/Address/Data Lines for READ MEMORY Commands**

Note 1 applies to entire table

| | Command Name | | | | | |
|---|---|---|---|---|---|---|
| | READ | FAST READ | DUAL OUTPUT FAST READ | DUAL INPUT/OUTPUT FAST READ | QUAD OUTPUT FAST READ | QUAD INPUT/OUTPUT FAST READ |
| | 03 | 0B | 3B | BB | 6B | EB |
| **Extended SPI Protocol** | | | | | | |
| Supported | Yes | Yes | Yes | Yes | Yes | Yes |
| Command Input | DQ0 | DQ0 | DQ0 | DQ0 | DQ0 | DQ0 |
| Address Input | DQ0 | DQ0 | DQ0 | DQ[1:0] | DQ0 | DQ[3:0] |
| Data Output | DQ1 | DQ1 | DQ[1:0] | DQ[1:0] | DQ[3:0] | DQ[3:0] |
| **Dual SPI Protocol** | | | | | | |
| Supported | No | Yes | Yes | Yes | No | No |
| Command Input | – | DQ[1:0] | DQ[1:0] | DQ[1:0] | – | – |
| Address Input | – | DQ[1:0] | DQ[1:0] | DQ[1:0] | – | – |
| Data Output | – | DQ[1:0] | DQ[1:0] | DQ[1:0] | – | – |
| **Quad SPI Protocol** | | | | | | |
| Supported | No | Yes | No | No | Yes | Yes |
| Command Input | – | DQ[3:0] | – | – | DQ[3:0] | DQ[3:0] |
| Address Input | – | DQ[3:0] | – | – | DQ[3:0] | DQ[3:0] |
| Data Output | – | DQ[3:0] | – | – | DQ[3:0] | DQ[3:0] |

Notes:
1. *Yes* in the "Supported" row for each protocol indicates that the command in that column is supported; when supported, a command's functionality is identical for the entire column regardless of the protocol. For example, a FAST READ functions the same for all three protocols even though its data is input/output differently depending on the protocol.
2. FAST READ is similar to READ, but requires dummy clock cycles following the address bytes and can operate at a higher frequency ($^{f}C$).


Micron Technology, Inc. reserves the right to change products or specifications without notice.
© 2012 Micron Technology, Inc. All rights reserved.

## Figure 14: READ Command

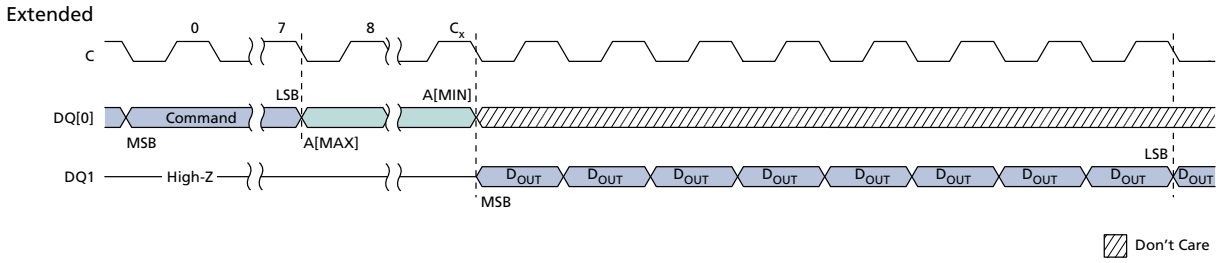


Note: 1. $C_x = 7 + (A[MAX] + 1)$.

## Figure 15: FAST READ Command

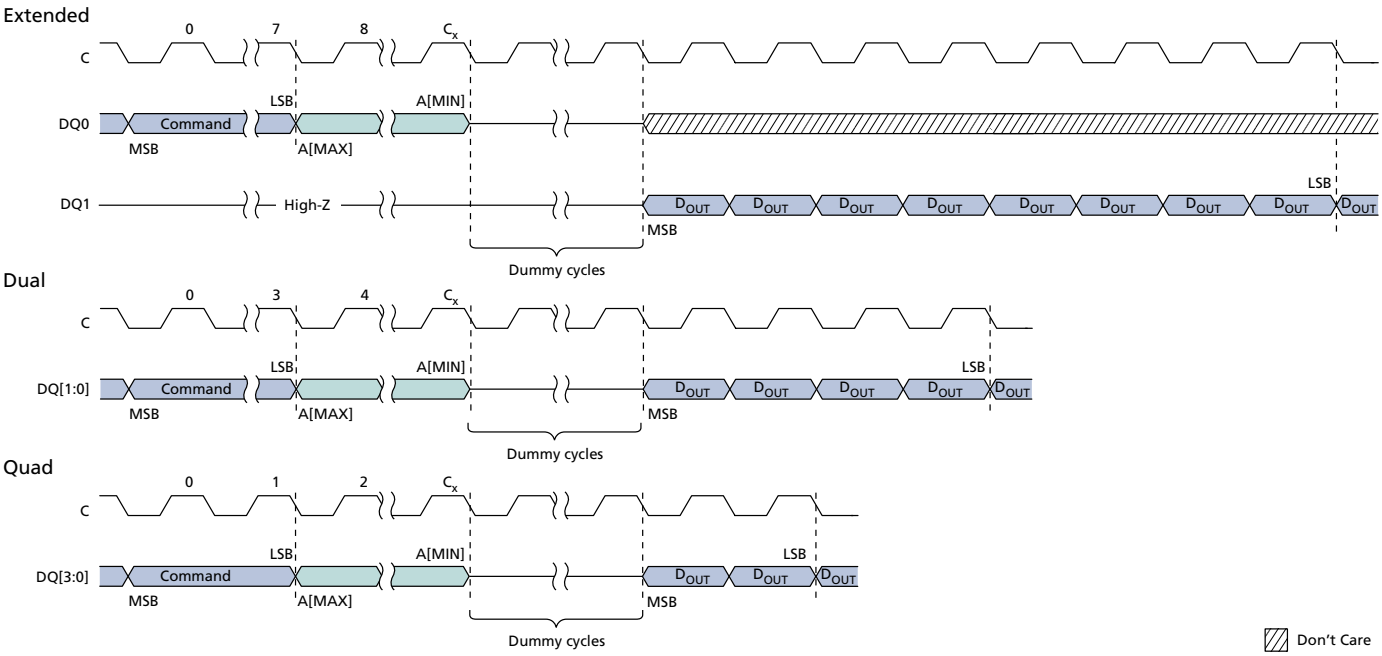


Note: 1. For extended protocol, $C_x = 7 + (A[MAX] + 1)$; For dual protocol, $C_x = 3 + (A[MAX] + 1)/2$; For quad protocol, $C_x = 1 + (A[MAX] + 1)/4$.


Micron Technology, Inc. reserves the right to change products or specifications without notice.
© 2012 Micron Technology, Inc. All rights reserved.

## Figure 16: DUAL OUTPUT FAST READ

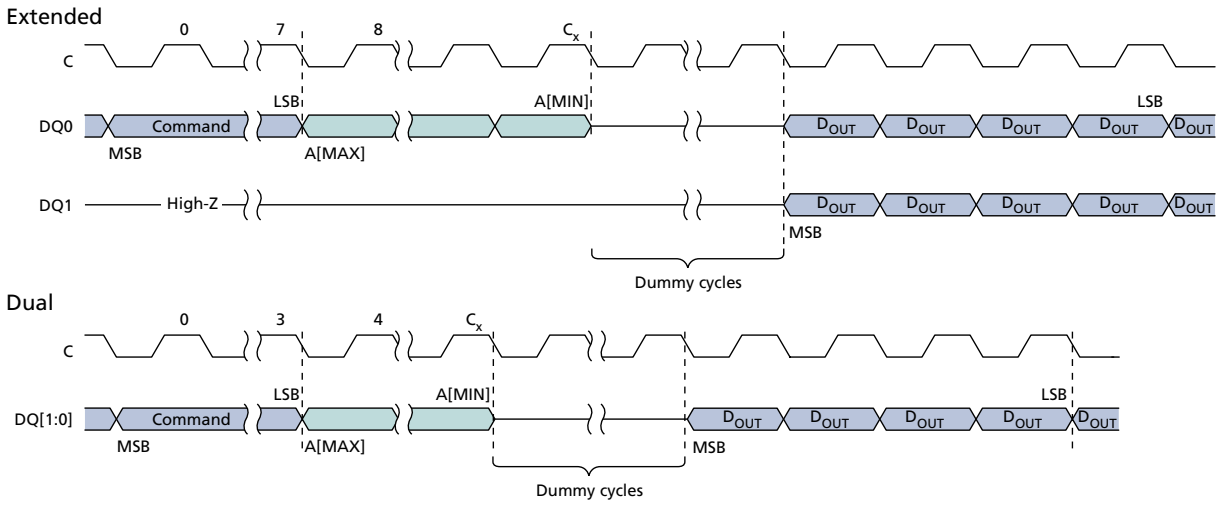


Note: 1. $C_x = 7 + (A[MAX] + 1)$.

## Figure 17: DUAL INPUT/OUTPUT FAST READ Command

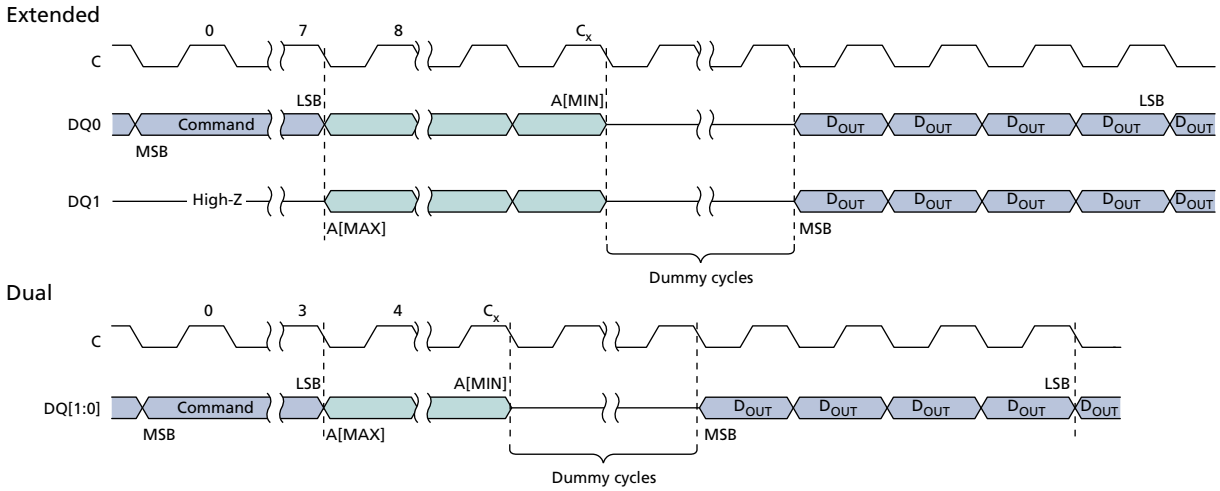


Note: 1. $C_x = 7 + (A[MAX] + 1)/2$.


Micron Technology, Inc. reserves the right to change products or specifications without notice.
© 2012 Micron Technology, Inc. All rights reserved.

**Figure 18: QUAD OUTPUT FAST READ Command**

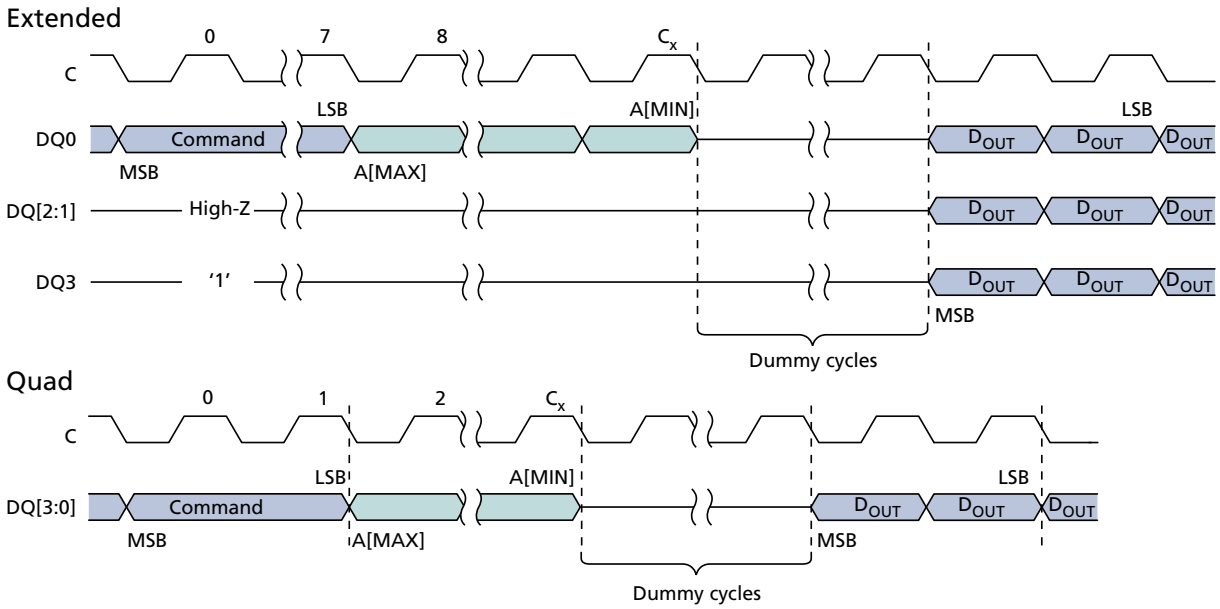


Note: 1. $C_x = 7 + (A[MAX] + 1)$.

**Figure 19: QUAD INPUT/OUTPUT FAST READ Command**

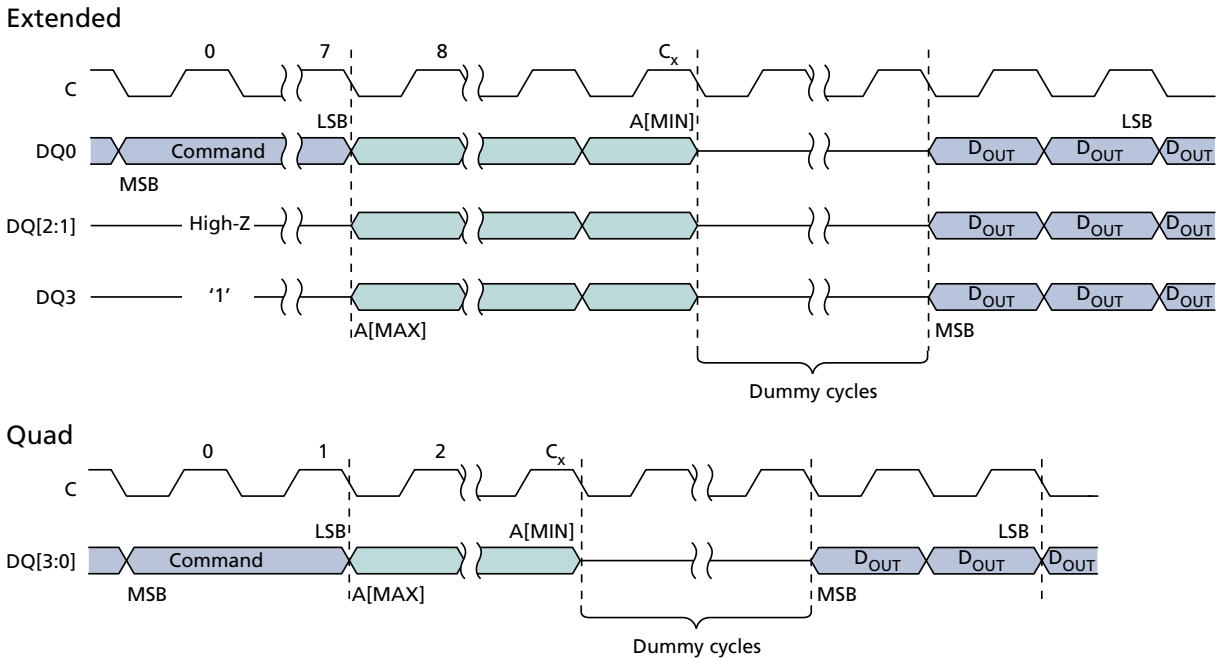


Note: 1. $C_x = 7 + (A[MAX] + 1)/4$.


Micron Technology, Inc. reserves the right to change products or specifications without notice.
© 2012 Micron Technology, Inc. All rights reserved.

# PROGRAM Operations

PROGRAM commands are initiated by first executing the WRITE ENABLE command to set the write enable latch bit to 1. S# is then driven LOW and held LOW until the eighth bit of the last data byte has been latched in, after which it must be driven HIGH. The command code is input on DQ0, followed by input on DQ[n] of address bytes and at least one data byte. Each address bit is latched in during the rising edge of the clock. When S# is driven HIGH, the operation, which is self-timed, is initiated; its duration is $^{t}$PP.

If the bits of the least significant address, which is the starting address, are not all zero, all data transmitted beyond the end of the current page is programmed from the starting address of the same page. If the number of bytes sent to the device exceed the maximum page size, previously latched data is discarded and only the last maximum page-size number of data bytes are guaranteed to be programmed correctly within the same page. If the number of bytes sent to the device is less than the maximum page size, they are correctly programmed at the specified addresses without any effect on the other bytes of the same page.

When the operation is in progress, the write in progress bit is set to 1. The write enable latch bit is cleared to 0, whether the operation is successful or not. The status register and flag status register can be polled for the operation status. An operation can be paused or resumed by the PROGRAM/ERASE SUSPEND or PROGRAM/ERASE RESUME command, respectively. When the operation completes, the write in progress bit is cleared to 0.

If the operation times out, the write enable latch bit is reset and the program fail bit is set to 1. If S# is not driven HIGH, the command is not executed, flag status register error bits are not set, and the write enable latch remains set to 1. When a command is applied to a protected sector, the command is not executed, the write enable latch bit remains set to 1, and flag status register bits 1 and 4 are set.

**Table 24: Data/Address Lines for PROGRAM Commands**

Note 1 applies to entire table

| Command Name | Data In | Address In | Extended | Dual | Quad |
|---|---|---|---|---|---|
| PAGE PROGRAM | DQ0 | DQ0 | Yes | Yes | Yes |
| DUAL INPUT FAST PROGRAM | DQ[1:0] | DQ0 | Yes | Yes | No |
| EXTENDED DUAL INPUT FAST PROGRAM | DQ[1:0] | DQ[1:0] | Yes | Yes | No |
| QUAD INPUT FAST PROGRAM | DQ[3:0] | DQ0 | Yes | No | Yes |
| EXTENDED QUAD INPUT FAST PROGRAM | DQ[3:0] | DQ[3:0] | Yes | No | Yes |

Note: 1. *Yes* in the protocol columns indicates that the command is supported and has the same functionality and command sequence as other commands marked *Yes*.


Micron Technology, Inc. reserves the right to change products or specifications without notice.
© 2012 Micron Technology, Inc. All rights reserved.

**Figure 20: PAGE PROGRAM Command**

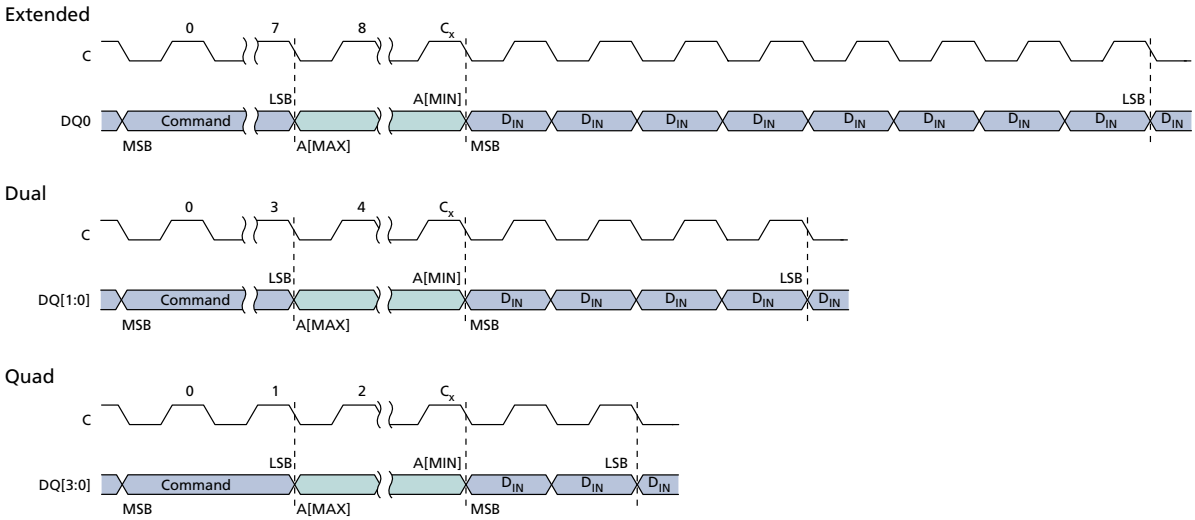


Note: 1. For extended SPI protocol, $C_x = 7 + (A[MAX] + 1)$.

For dual SPI protocol, $C_x = 3 + (A[MAX] + 1)/2$.

For quad SPI protocol, $C_x = 1 + (A[MAX] + 1)/4$.


Micron Technology, Inc. reserves the right to change products or specifications without notice.
© 2012 Micron Technology, Inc. All rights reserved.

**Figure 21: DUAL INPUT FAST PROGRAM Command**

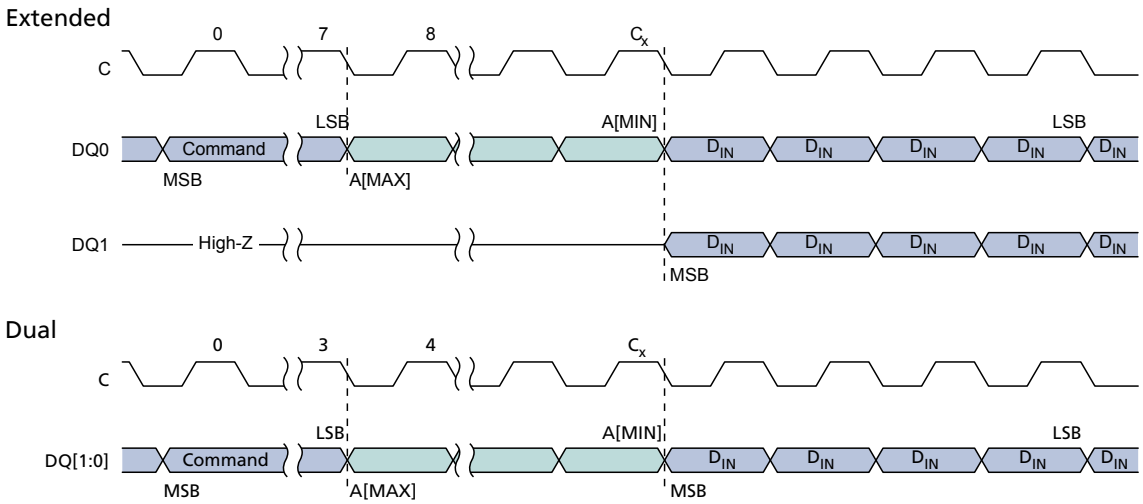


Note: 1. For extended SPI protocol, $C_x = 7 + (A[MAX] + 1)$.

For dual SPI protocol, $C_x = 3 + (A[MAX] + 1)/2$.

**Figure 22: EXTENDED DUAL INPUT FAST PROGRAM Command**

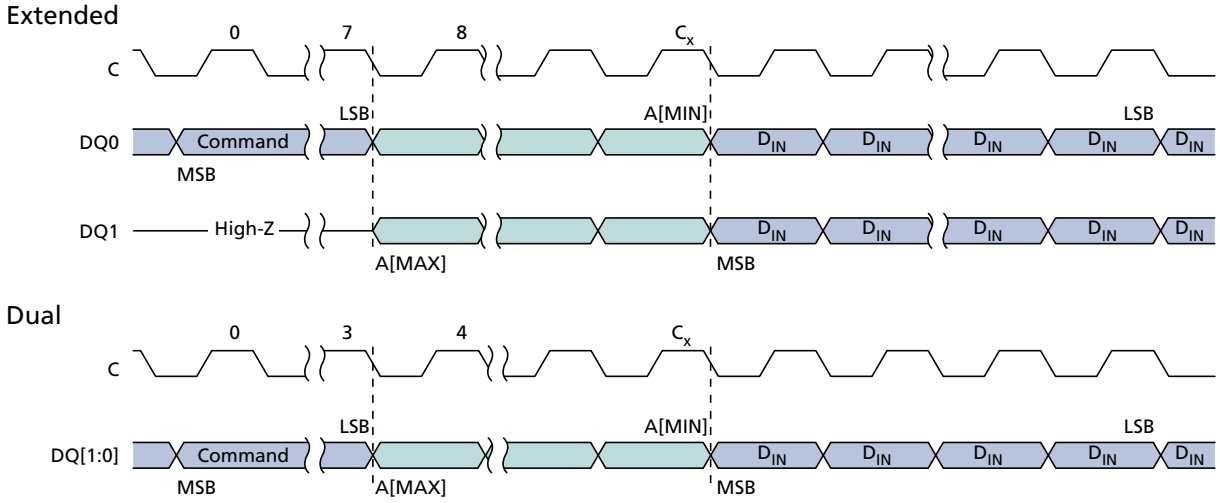


Note: 1. For extended SPI protocol, $C_x = 7 + (A[MAX] + 1)/2$.

For dual SPI protocol, $C_x = 3 + (A[MAX] + 1)/2$.


Micron Technology, Inc. reserves the right to change products or specifications without notice.
© 2012 Micron Technology, Inc. All rights reserved.

**Figure 23: QUAD INPUT FAST PROGRAM Command**

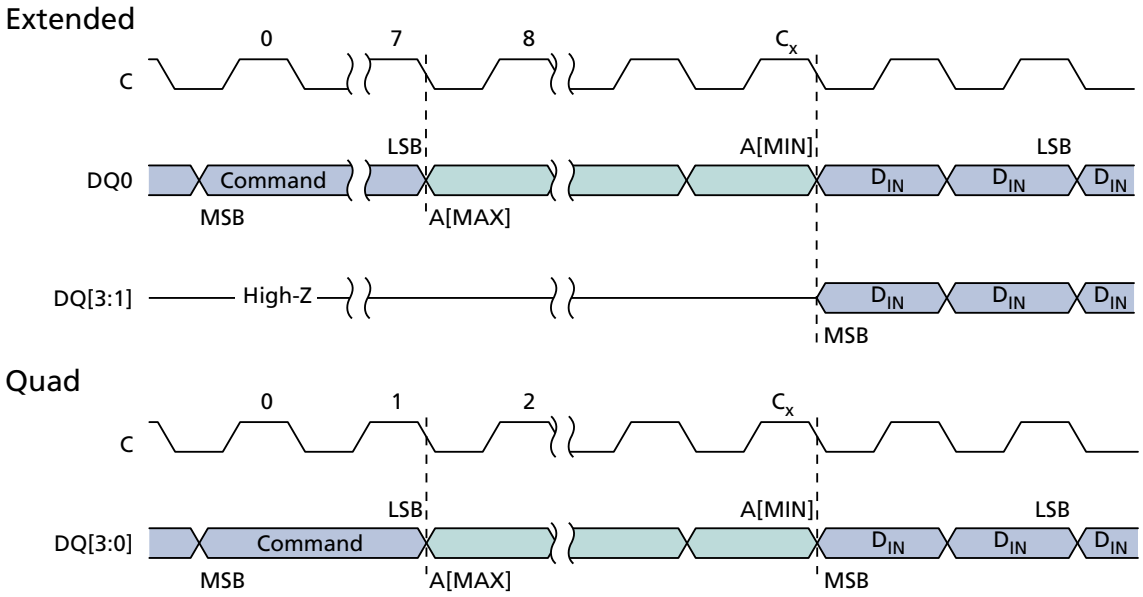


Note: 1. For extended SPI protocol, $C_x = 7 + (A[MAX] + 1)/4$.

For quad SPI protocol, $C_x = 1 + (A[MAX] + 1)/4$.


Micron Technology, Inc. reserves the right to change products or specifications without notice.
© 2012 Micron Technology, Inc. All rights reserved.

**Figure 24: EXTENDED QUAD INPUT FAST PROGRAM Command**

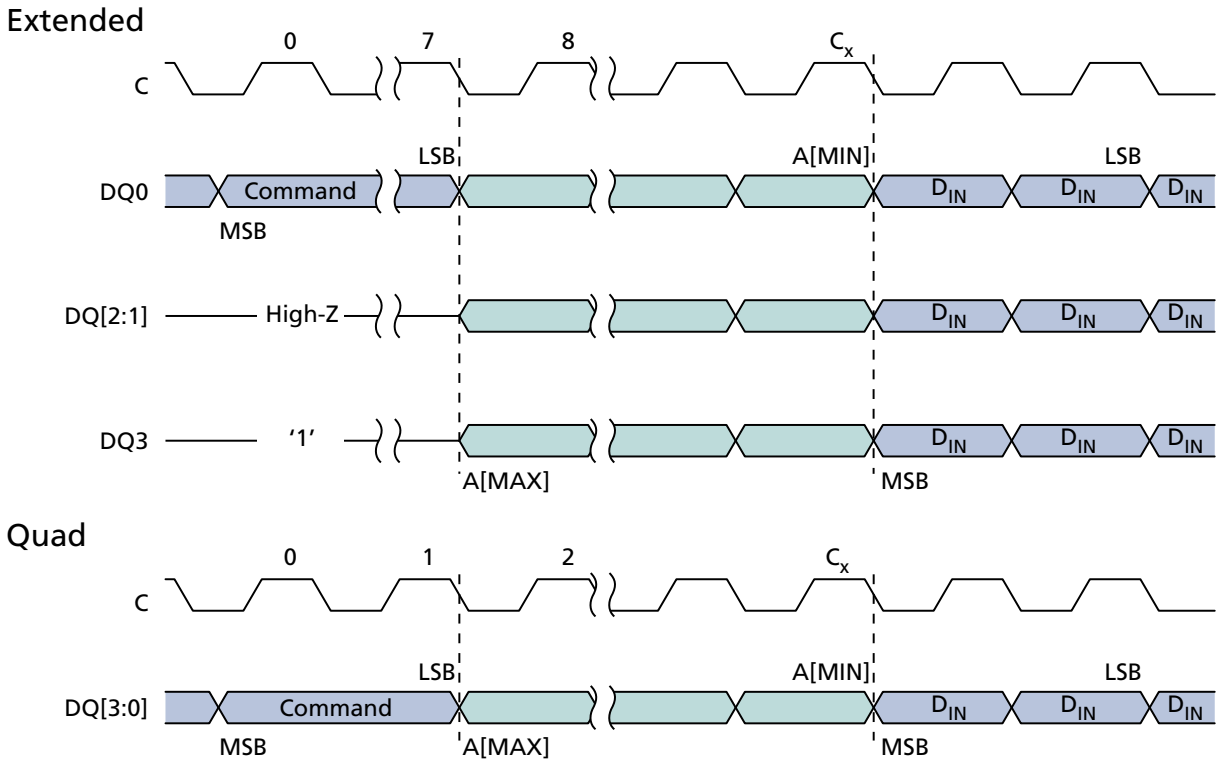


Note: 1. For extended SPI protocol, $C_x = 7 + (A[MAX] + 1)/4$.

For quad SPI protocol, $C_x = 1 + (A[MAX] + 1)/4$.


Micron Technology, Inc. reserves the right to change products or specifications without notice.
© 2012 Micron Technology, Inc. All rights reserved.

# WRITE Operations

## WRITE ENABLE Command

The WRITE ENABLE operation sets the write enable latch bit. To execute a WRITE ENABLE command, S# is driven LOW and held LOW until the eighth bit of the command code has been latched in, after which it must be driven HIGH. The command code is input on DQ0 for extended SPI protocol, on DQ[1:0] for dual SPI protocol, and on DQ[3:0] for quad SPI protocol.

The write enable latch bit must be set before every PROGRAM, ERASE, and WRITE command. If S# is not driven HIGH after the command code has been latched in, the command is not executed, flag status register error bits are not set, and the write enable latch remains cleared to its default setting of 0.

## WRITE DISABLE Command

The WRITE DISABLE operation clears the write enable latch bit. To execute a WRITE DISABLE command, S# is driven LOW and held LOW until the eighth bit of the command code has been latched in, after which it must be driven HIGH. The command code is input on DQ0 for extended SPI protocol, on DQ[1:0] for dual SPI protocol, and on DQ[3:0] for quad SPI protocol.

If S# is not driven HIGH after the command code has been latched in, the command is not executed, flag status register error bits are not set, and the write enable latch remains set to 1.


Micron Technology, Inc. reserves the right to change products or specifications without notice.
© 2012 Micron Technology, Inc. All rights reserved.

**Figure 25: WRITE ENABLE and WRITE DISABLE Command Sequence**

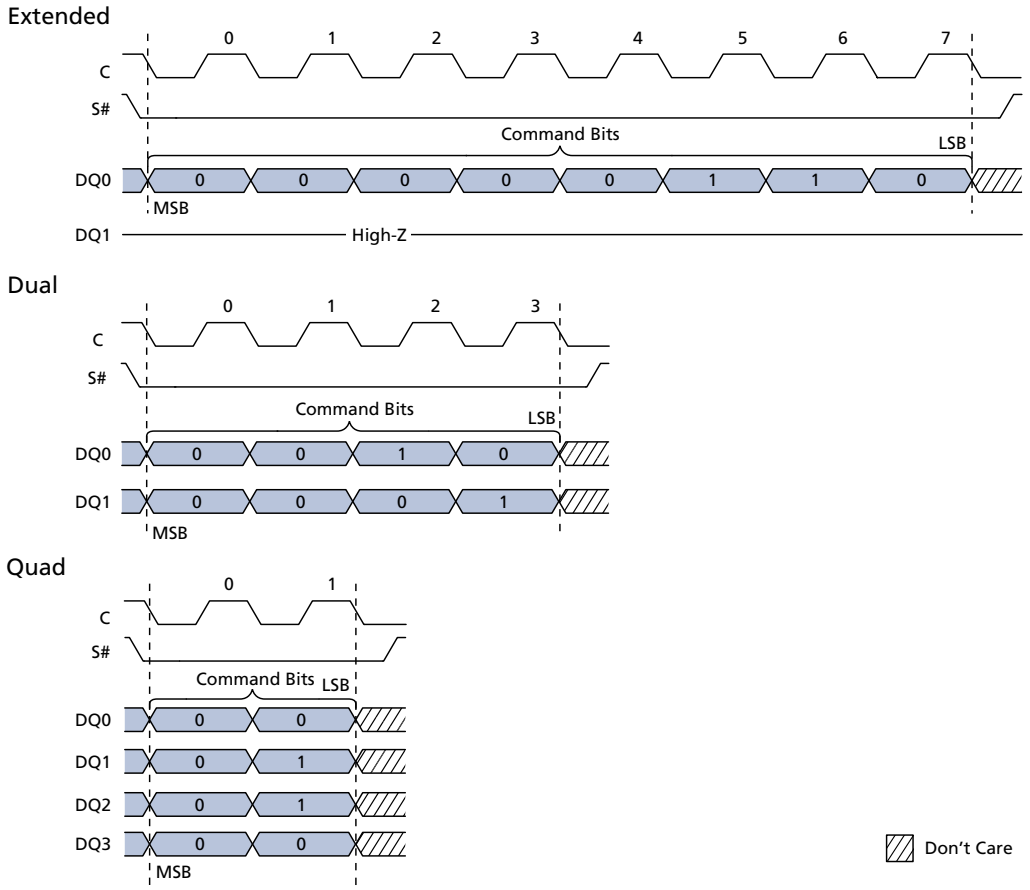


Note: 1. Shown here is the WRITE ENABLE command code, which is 06h or 0000 0110 binary. The WRITE DISABLE command sequence is identical, except the WRITE DISABLE command code is 04h or 0000 0100 binary.


Micron Technology, Inc. reserves the right to change products or specifications without notice.
© 2012 Micron Technology, Inc. All rights reserved.

# ERASE Operations

## SUBSECTOR ERASE Command

To execute the SUBSECTOR ERASE command (and set the selected subsector bits set to FFh), the WRITE ENABLE command must be issued to set the write enable latch bit to 1. S# is driven LOW and held LOW until the eighth bit of the last data byte has been latched in, after which it must be driven HIGH. The command code is input on DQ0, followed by three address bytes; any address within the subsector is valid. Each address bit is latched in during the rising edge of the clock. When S# is driven HIGH, the operation, which is self-timed, is initiated; its duration is $^{t}$SSE. The operation can be suspended and resumed by the PROGRAM/ERASE SUSPEND and PROGRAM/ERASE RESUME commands, respectively.

If the write enable latch bit is not set, the device ignores the SUBSECTOR ERASE command and no error bits are set to indicate operation failure.

When the operation is in progress, the write in progress bit is set to 1. The write enable latch bit is cleared to 0, whether the operation is successful or not. The status register and flag status register can be polled for the operation status. When the operation completes, the write in progress bit is cleared to 0.

If the operation times out, the write enable latch bit is reset and the erase error bit is set to 1. If S# is not driven HIGH, the command is not executed, flag status register error bits are not set, and the write enable latch remains set to 1. When a command is applied to a protected subsector, the command is not executed. Instead, the write enable latch bit remains set to 1, and flag status register bits 1 and 5 are set.

## SECTOR ERASE Command

To execute the SECTOR ERASE command (and set selected sector bits to FFh), the WRITE ENABLE command must be issued to set the write enable latch bit to 1. S# is driven LOW and held LOW until the eighth bit of the last data byte has been latched in, after which it must be driven HIGH. The command code is input on DQ0, followed by three address bytes; any address within the sector is valid. Each address bit is latched in during the rising edge of the clock. When S# is driven HIGH, the operation, which is self-timed, is initiated; its duration is $^{t}$SE. The operation can be suspended and resumed by the PROGRAM/ERASE SUSPEND and PROGRAM/ERASE RESUME commands, respectively.

If the write enable latch bit is not set, the device ignores the SECTOR ERASE command and no error bits are set to indicate operation failure.

When the operation is in progress, the write in progress bit is set to 1 and the write enable latch bit is cleared to 0, whether the operation is successful or not. The status register and flag status register can be polled for the operation status. When the operation completes, the write in progress bit is cleared to 0.

If the operation times out, the write enable latch bit is reset and erase error bit is set to 1. If S# is not driven HIGH, the command is not executed, flag status register error bits are not set, and the write enable latch remains set to 1. When a command is applied to a protected sector, the command is not executed. Instead, the write enable latch bit remains set to 1, and flag status register bits 1 and 5 are set.


Micron Technology, Inc. reserves the right to change products or specifications without notice.
© 2012 Micron Technology, Inc. All rights reserved.

**Figure 26: SUBSECTOR and SECTOR ERASE Command**

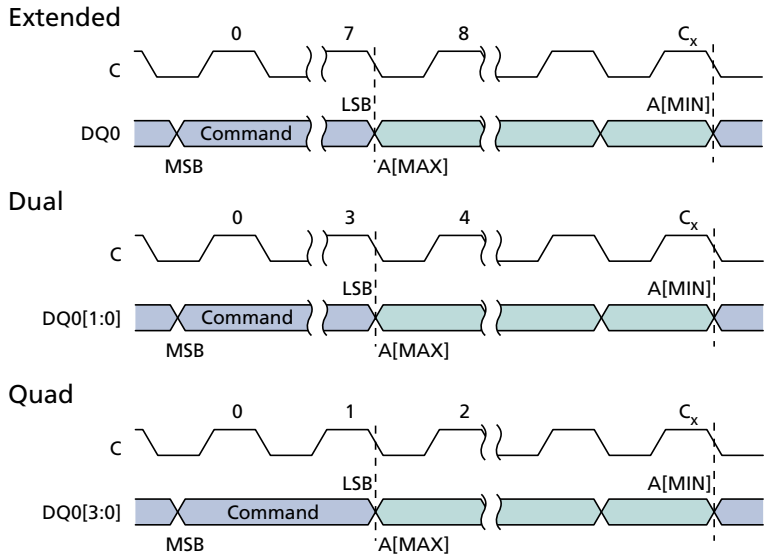


Note: 1. For extended SPI protocol, $C_x = 7 + (A[MAX] + 1)$.

For dual SPI protocol, $C_x = 3 + (A[MAX] + 1)/2$.

For quad SPI protocol, $C_x = 1 + (A[MAX] + 1)/4$.

## BULK ERASE Command

To initiate the BULK ERASE command, the WRITE ENABLE command must be issued to set the write enable latch bit to 1. S# is driven LOW and held LOW until the eighth bit of the last data byte has been latched in, after which it must be driven HIGH. The command code is input on DQ0. When S# is driven HIGH, the operation, which is self-timed, is initiated; its duration is $^{t}$BE.

If the write enable latch bit is not set, the device ignores the BULK ERASE command and no error bits are set to indicate operation failure.

When the operation is in progress, the write in progress bit is set to 1 and the write enable latch bit is cleared to 0, whether the operation is successful or not. The status register and flag status register can be polled for the operation status. When the operation completes, the write in progress bit is cleared to 0.

If the operation times out, the write enable latch bit is reset and erase error bit is set to 1. If S# is not driven HIGH, the command is not executed, the flag status register error bits are not set, and the write enable latch remains set to 1.

The command is not executed if any sector is locked. Instead, the write enable latch bit remains set to 1, and flag status register bits 1 and 5 are set.


Micron Technology, Inc. reserves the right to change products or specifications without notice.
© 2012 Micron Technology, Inc. All rights reserved.

**Figure 27: BULK ERASE Command**

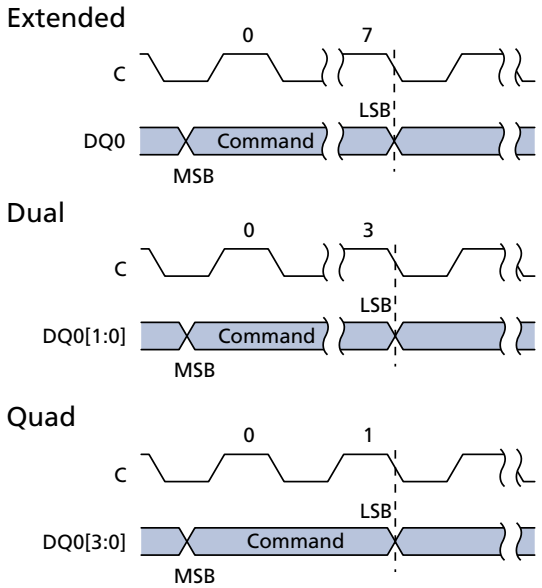


## PROGRAM/ERASE SUSPEND Command

To initiate the PROGRAM/ERASE SUSPEND command, S# is driven LOW. The command code is input on DQ0. The operation is terminated by the PROGRAM/ERASE RESUME command.

PROGRAM/ERASE SUSPEND command enables the memory controller to interrupt and suspend an array PROGRAM or ERASE operation within the program/erase latency.

If a SUSPEND command is issued during a PROGRAM operation, then the flag status register bit 2 is set to 1. After erase/program latency time, the flag status register bit 7 is also set to 1, showing the device to be in a suspended state, waiting for any operation (see the Operations Allowed/Disallowed During Device States table).

If a SUSPEND command is issued during an ERASE operation, then the flag status register bit 6 is set to 1. After erase/program latency time, the flag status register bit 7 is also set to 1, showing that device to be in a suspended state, waiting for any operation (see the Operations Allowed/Disallowed During Device States table).

If the time remaining to complete the operation is less than the suspend latency, the device completes the operation and clears the flag status register bits 2 or 6, as applicable. Because the suspend state is volatile, if there is a power cycle, the suspend state information is lost and the flag status register powers up as 80h.

During an ERASE SUSPEND operation, a PROGRAM or READ operation is possible in any sector except the one in a suspended state. Reading from a sector that is in a suspended state will output indeterminate data. The device ignores a PROGRAM command to a sector that is in an ERASE SUSPEND state; it also sets the flag status register bit 4 to 1: program failure/protection error, and leaves the write enable latch bit unchanged. The commands allowed during an erase suspend state include the WRITE LOCK REGISTER command, the WRITE VOLATILE CONFIGURATION REGISTER com-


Micron Technology, Inc. reserves the right to change products or specifications without notice.
© 2012 Micron Technology, Inc. All rights reserved.

mand, and the WRITE ENHANCED VOLATILE CONFIGURATION REGISTER command. When the ERASE operation resumes, it does not check the new lock status of the WRITE LOCK REGISTER command.

During a PROGRAM SUSPEND operation, a READ operation is possible in any page except the one in a suspended state. Reading from a page that is in a suspended state will output indeterminate data. The commands allowed during a program suspend state include the WRITE VOLATILE CONFIGURATION REGISTER command and the WRITE ENHANCED VOLATILE CONFIGURATION REGISTER command.

It is possible to nest a PROGRAM/ERASE SUSPEND operation inside a PROGRAM/ERASE SUSPEND operation just once. Issue an ERASE command and suspend it. Then issue a PROGRAM command and suspend it also. With the two operations suspended, the next PROGRAM/ERASE RESUME command resumes the latter operation, and a second PROGRAM/ERASE RESUME command resumes the former (or first) operation.

**Table 25: Suspend Parameters**

| Parameter | Condition | Typ | Max | Units | Notes |
|---|---|---|---|---|---|
| Erase to suspend | Sector erase or erase resume to erase suspend | 150 | – | µs | 1 |
| Program to suspend | Program resume to program suspend | 5 | – | µs | 1 |
| Subsector erase to suspend | Subsector erase or subsector erase resume to erase suspend | 50 | – | µs | 1 |
| Suspend latency | Program | 7 | – | µs | 2 |
| Suspend latency | Subsector erase | 15 | – | µs | 2 |
| Suspend latency | Erase | 15 | – | µs | 3 |

Notes:
1. Timing is not internally controlled.
2. Any READ command accepted.
3. Any command except the following are accepted: SECTOR, SUBSECTOR, or BULK ERASE; WRITE STATUS REGISTER; WRITE NONVOLATILE CONFIGURATION REGISTER; and PROGRAM OTP.


Micron Technology, Inc. reserves the right to change products or specifications without notice.
© 2012 Micron Technology, Inc. All rights reserved.

**Table 26: Operations Allowed/Disallowed During Device States**

Note 1 applies to entire table

| Operation | Standby State | Program or Erase State | Subsector Erase Suspend or Program Suspend State | Erase Suspend State | Notes |
|---|---|---|---|---|---|
| READ | Yes | No | Yes | Yes | 2 |
| PROGRAM | Yes | No | No | Yes/No | 3 |
| ERASE | Yes | No | No | No | 4 |
| WRITE | Yes | No | No | No | 5 |
| WRITE | Yes | No | Yes | Yes | 6 |
| READ | Yes | Yes | Yes | Yes | 7 |
| SUSPEND | No | Yes | No | No | 8 |

Notes:
1. The device can be in only one state at a time. Depending on the state of the device, some operations are allowed (Yes) and others are not (No). For example, when the device is in the standby state, all operations except SUSPEND are allowed in any sector. For all device states except the erase suspend state, if an operation is allowed or disallowed in one sector, it is allowed or disallowed in all other sectors. In the erase suspend state, a PROGRAM operation is allowed in any sector except the one in which an ERASE operation has been suspended.
2. All READ operations except READ STATUS REGISTER and READ FLAG REGISTER. When issued to a sector or subsector that is simultaneously in an erase suspend state, the READ operation is accepted, but the data output is not guaranteed until the erase has completed.
3. All PROGRAM operations except PROGRAM OTP. In the erase suspend state, a PROGRAM operation is allowed in any sector (Yes) except the sector (No) in which an ERASE operation has been suspended.
4. Applies to the SECTOR ERASE or SUBSECTOR ERASE operation.
5. Applies to the following operations: WRITE STATUS REGISTER, WRITE NONVOLATILE CONFIGURATION REGISTER, PROGRAM OTP, and BULK ERASE.
6. Applies to the following operations: WRITE ENABLE, WRITE DISABLE, CLEAR FLAG STATUS REGISTER, WRITE LOCK REGISTER, WRITE VOLATILE, and ENHANCED VOLATILE CONFIGURATION REGISTER.
7. Applies to the READ STATUS REGISTER or READ FLAG STATUS REGISTER operation.
8. Applies to the PROGRAM SUSPEND or ERASE SUSPEND operation.

## PROGRAM/ERASE RESUME Command

To initiate the PROGRAM/ERASE RESUME command, S# is driven LOW. The command code is input on DQ0. The operation is terminated by driving S# HIGH.

When this command is executed, the status register write in progress bit is set to 1, and the flag status register program erase controller bit is set to 0. This command is ignored if the device is not in a suspended state.


Micron Technology, Inc. reserves the right to change products or specifications without notice.
© 2012 Micron Technology, Inc. All rights reserved.

# RESET Operations

**Table 27: Reset Command Set**

| Command | Command Code (Binary) | Command Code (Hex) | Address Bytes |
|---|---|---|---|
| RESET ENABLE | 0110 0110 | 66 | 0 |
| RESET MEMORY | 1001 1001 | 99 | 0 |

## RESET ENABLE and RESET MEMORY Command

To reset the device, the RESET ENABLE command must be followed by the RESET MEMORY command. To execute each command, S# is driven LOW. The command code is input on DQ0. A minimum de-selection time of $^{t}$SHSL2 must come between the RESET ENABLE and RESET MEMORY commands or a reset is not guaranteed. When these two commands are executed and S# is driven HIGH, the device enters a power-on reset condition. A time of $^{t}$SHSL3 is required before the device can be re-selected by driving S# LOW. It is recommended that the device exit XIP mode before executing these two commands to initiate a reset.

If a reset is initiated while a WRITE, PROGRAM, or ERASE operation is in progress or suspended, the operation is aborted and data may be corrupted.

**Figure 28: RESET ENABLE and RESET MEMORY Command**

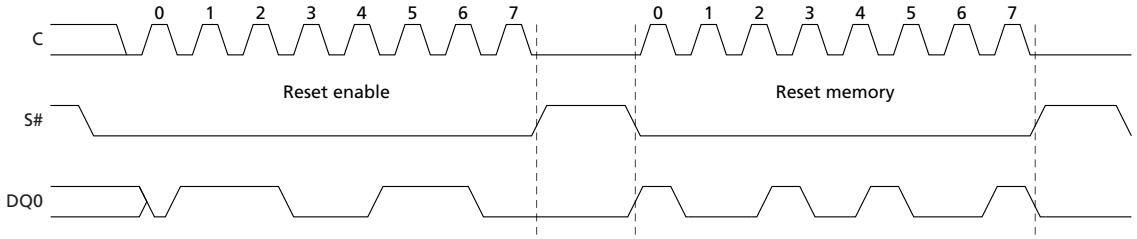


Note: 1. The number of lines and rate for transmission varies with extended, dual, or quad SPI.

## RESET Conditions

All volatile lock bits, the volatile configuration register, and the enhanced volatile configuration register are reset to the power-on reset default condition. The power-on reset condition depends on settings in the nonvolatile configuration register.


Micron Technology, Inc. reserves the right to change products or specifications without notice.
© 2012 Micron Technology, Inc. All rights reserved.

# ONE TIME PROGRAMMABLE Operations

## READ OTP ARRAY Command

To initiate a READ OTP ARRAY command, S# is driven LOW. The command code is input on DQ0, followed by three bytes and dummy clock cycles. Each address bit is latched in during the rising edge of C. Data is shifted out on DQ1, beginning from the specified address and at a maximum frequency of $^{f}$C (MAX) on the falling edge of the clock. The address increments automatically to the next address after each byte of data is shifted out. There is no rollover mechanism; therefore, if read continuously, after location 40h, the device continues to output data at location 40h. The operation is terminated by driving S# HIGH at any time during data output.

**Figure 29: READ OTP Command**

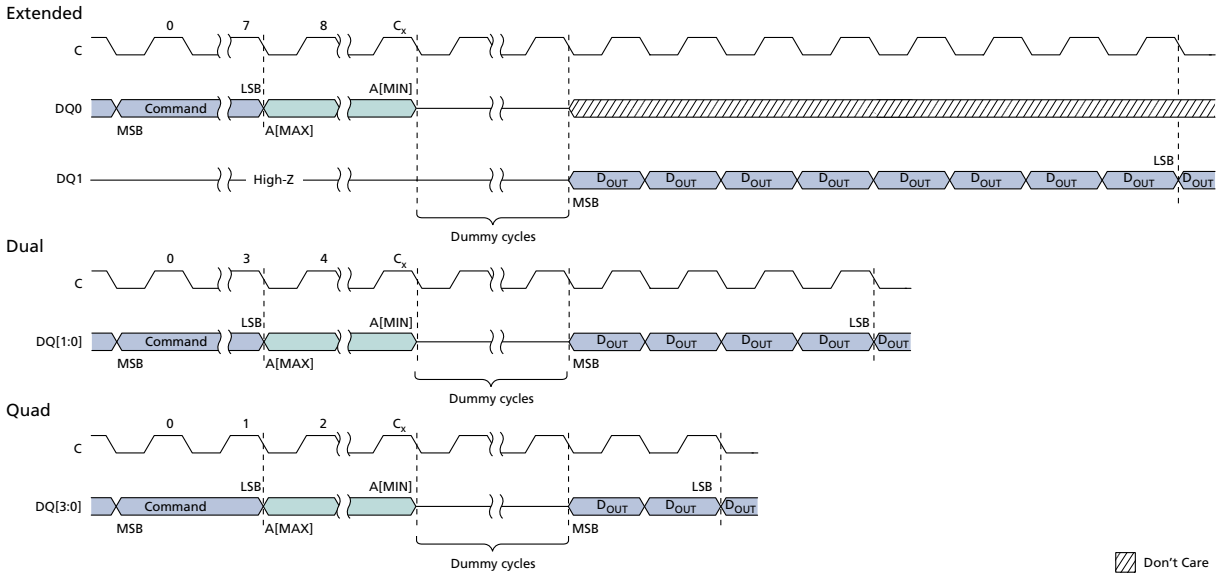


Note: 1. For extended SPI protocol, $C_x$ = 7 + (A[MAX] + 1).

For dual SPI protocol, $C_x$ = 3 + (A[MAX] + 1)/2.

For quad SPI protocol, $C_x$ = 1 + (A[MAX] + 1)/4.

## PROGRAM OTP ARRAY Command

To initiate the PROGRAM OTP ARRAY command, the WRITE ENABLE command must be issued to set the write enable latch bit to 1; otherwise, the PROGRAM OTP ARRAY command is ignored and flag status register bits are not set. S# is driven LOW and held LOW until the eighth bit of the last data byte has been latched in, after which it must be driven HIGH. The command code is input on DQ0, followed by three bytes and at least one data byte. Each address bit is latched in during the rising edge of the clock. When S# is driven HIGH, the operation, which is self-timed, is initiated; its duration is $^{t}$POTP. There is no rollover mechanism; therefore, after a maximum of 65 bytes are latched in and subsequent bytes are discarded.


Micron Technology, Inc. reserves the right to change products or specifications without notice.
© 2012 Micron Technology, Inc. All rights reserved.

PROGRAM OTP ARRAY programs, at most, 64 bytes to the OTP memory area and one OTP control byte. When the operation is in progress, the write in progress bit is set to 1. The write enable latch bit is cleared to 0, whether the operation is successful or not, and the status register and flag status register can be polled for the operation status. When the operation completes, the write in progress bit is cleared to 0.

If the operation times out, the write enable latch bit is reset and the program fail bit is set to 1. If S# is not driven HIGH, the command is not executed, flag status register error bits are not set, and the write enable latch remains set to 1.

The OTP control byte (byte 64) is used to permanently lock the OTP memory array.

**Table 28: OTP Control Byte (Byte 64)**

| Bit | Name | Settings | Description |
|---|---|---|---|
| 0 | OTP control byte | 0 = Locked<br>1 = Unlocked (Default) | Used to permanently lock the OTP array (byte 64). When bit 0 = 1, the OTP array can be programmed. When bit 0 = 0, the OTP array is read only.<br>Once bit 0 has been programmed to 0, it can no longer be changed to 1. PROGRAM OTP ARRAY is ignored, write enable latch bit remains set, and flag status register bits 1 and 4 are set. |


Micron Technology, Inc. reserves the right to change products or specifications without notice.
© 2012 Micron Technology, Inc. All rights reserved.

**Figure 30: PROGRAM OTP Command**

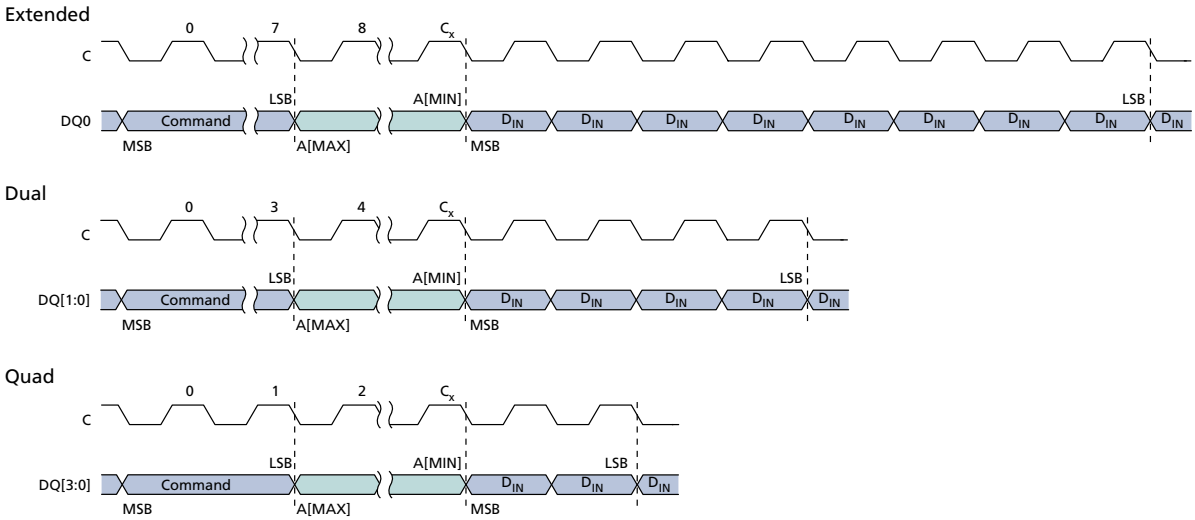


Note: 1. For extended SPI protocol, $C_x = 7 + (A[MAX] + 1)$.

For dual SPI protocol, $C_x = 3 + (A[MAX] + 1)/2$.

For quad SPI protocol, $C_x = 1 + (A[MAX] + 1)/4$.


Micron Technology, Inc. reserves the right to change products or specifications without notice.
© 2012 Micron Technology, Inc. All rights reserved.

# XIP Mode

Execute-in-place (XIP) mode allows the memory to be read by sending an address to the device and then receiving the data on one, two, or four pins in parallel, depending on the customer requirements. XIP mode offers maximum flexibility to the application, saves instruction overhead, and reduces random access time.

## Activate or Terminate XIP Using Volatile Configuration Register

Applications that boot in SPI and must switch to XIP use the volatile configuration register. XIP provides faster memory READ operations by requiring only an address to execute, rather than a command code and an address.

To activate XIP requires two steps. First, enable XIP by setting volatile configuration register bit 3 to 0. Next, drive the XIP confirmation bit to 0 during the next FAST READ operation. XIP is then active. Once in XIP, any command that occurs after S# is toggled requires only address bits to execute; a command code is not necessary, and device operations use the SPI protocol that is enabled. XIP is terminated by driving the XIP confirmation bit to 1. The device automatically resets volatile configuration register bit 3 to 1.

**Note:** For devices with basic XIP, indicated by a part number feature set digit of 2 or 4, it is not necessary to set the volatile configuration register bit 3 to 0 to enable XIP. Instead, it is enabled by setting the XIP confirmation bit to 0 during the first dummy clock cycle after any FAST READ command.

## Activate or Terminate XIP Using Nonvolatile Configuration Register

Applications that must boot directly in XIP use the nonvolatile configuration register. To enable a device to power-up in XIP using the nonvolatile configuration register, set nonvolatile configuration register bits [11:9]. Settings vary according to protocol, as explained in the Nonvolatile Configuration Register section. Because the device boots directly in XIP, the confirmation bit is already set to 0, and after the next power cycle, XIP is active. Once in XIP, a command code is unnecessary, and device operations use the SPI protocol currently enabled. XIP is terminated by driving the XIP confirmation bit to 1.


Micron Technology, Inc. reserves the right to change products or specifications without notice.
© 2012 Micron Technology, Inc. All rights reserved.

**Figure 31: XIP Mode Directly After Power-On**

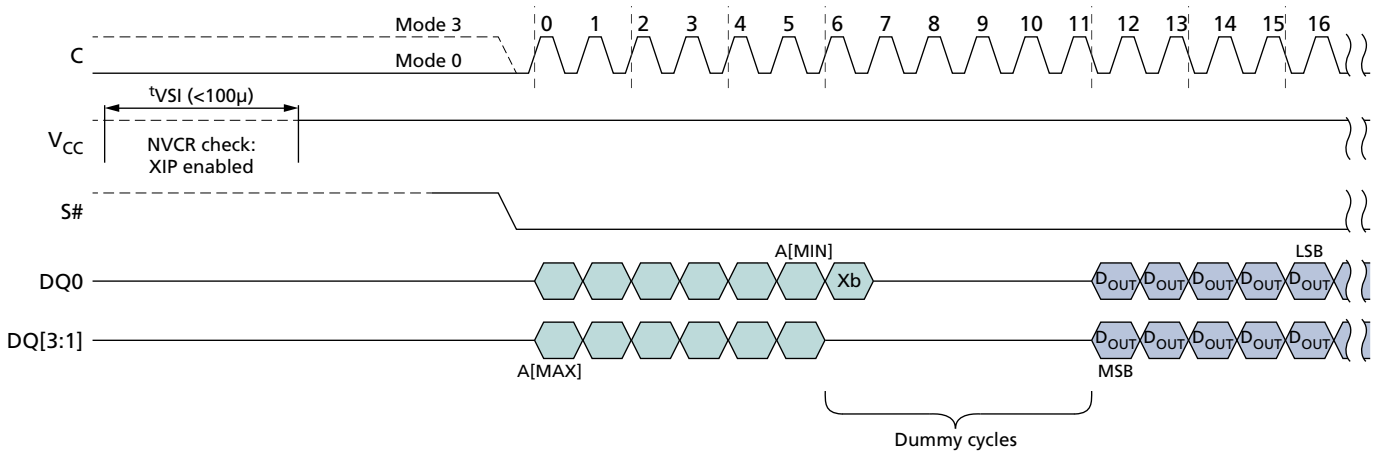


Note: 1. Xb is the XIP confirmation bit and should be set as follows: 0 to keep XIP state; 1 to exit XIP mode and return to standard read mode.

## Confirmation Bit Settings Required to Activate or Terminate XIP

The XIP confirmation bit setting activates or terminates XIP after it has been enabled or disabled. This bit is the value on DQ0 during the first dummy clock cycle in the FAST READ operation. XIP requires at least one additional clock cycle to send the XIP confirmation bit to the memory on DQ0 during the first dummy clock cycle.

**Table 29: XIP Confirmation Bit**

| Bit Value | Description |
|---|---|
| 0 | Activates XIP: While this bit is 0, XIP remains activated. |
| 1 | Terminates XIP: When this bit is set to 1, XIP is terminated and the device returns to SPI. |

**Table 30: Effects of Running XIP in Different Protocols**

| Protocol | Effect | Notes |
|---|---|---|
| Extended I/O, Dual I/O | In a device with a dedicated part number where RST# is enabled, a LOW pulse on RST# resets XIP and the device to the state it was in previous to the last power-up, as defined by the nonvolatile configuration register. | |
| Dual I/O | Values of DQ1 during the first dummy clock cycle are "Don't Care." | |
| Quad I/O | Values of DQ[3:1] during the first dummy clock cycle are "Don't Care."<br>In a device with a dedicated part number where RST# is enabled, a LOW pulse on RST# resets XIP and the device to the state it was in previous to the last power-up, as defined by the nonvolatile configuration register. | 1 |

Note: 1. In a device with a dedicated part number, memory can be reset only when the device is deselected.


Micron Technology, Inc. reserves the right to change products or specifications without notice.
© 2012 Micron Technology, Inc. All rights reserved.

## Terminating XIP After a Controller and Memory Reset

The system controller and the device can become out of synchronization if, during the life of the application, the system controller is reset without the device being reset. In such a case, the controller can reset the memory to power-on reset if the memory has reset functionality. (Reset is available in devices with a dedicated part number.)

If reset functionality is not available, has been disabled, or is not supported by the controller, the controller must execute the following sequence to terminate XIP in the memory device. In quad I/O protocol, drive DQ0 = 1 with S# held LOW for seven clock cycles; S# must driven HIGH before the eighth clock cycle. In dual I/O protocol, drive DQ0 = 1 with S# held LOW for 13 clock cycles; S# must driven HIGH before the fourteenth clock cycle. If the device is in extended protocol, drive DQ0 = 1 with S# held LOW for 25 clock cycles; S# must driven HIGH before the twenty-sixth clock cycle.

These sequences cause the controller to set the XIP confirmation bit to 1, thereby terminating XIP. However, it does not reset the device or interrupt PROGRAM/ERASE operations that may be in progress. After terminating XIP, the controller must execute RESET ENABLE and RESET MEMORY to implement a software reset and reset the device.


Micron Technology, Inc. reserves the right to change products or specifications without notice.
© 2012 Micron Technology, Inc. All rights reserved.

# Power-Up and Power-Down

## Power-Up and Power-Down Requirements

At power-up and power-down, the device must not be selected; that is, S# must follow the voltage applied on $V_{CC}$ until $V_{CC}$ reaches the correct values: $V_{CC,min}$ at power-up and $V_{SS}$ at power-down.

To avoid data corruption and inadvertent WRITE operations during power-up, a power-on reset circuit is included. The logic inside the device is held to RESET while $V_{CC}$ is less than the power-on reset threshold voltage shown here; all operations are disabled, and the device does not respond to any instruction. During a standard power-up phase, the device ignores all commands except READ STATUS REGISTER and READ FLAG STATUS REGISTER. These operations can be used to check the memory internal state. After power-up, the device is in standby power mode; the write enable latch bit is reset; the write in progress bit is reset; and the lock registers are configured as: (write lock bit, lock down bit) = (0,0).

Normal precautions must be taken for supply line decoupling to stabilize the $V_{CC}$ supply. Each device in a system should have the $V_{CC}$ line decoupled by a suitable capacitor (typically 100nF) close to the package pins. At power-down, when $V_{CC}$ drops from the operating voltage to below the power-on-reset threshold voltage shown here, all operations are disabled and the device does not respond to any command.
**Note:** If power-down occurs while a WRITE, PROGRAM, or ERASE cycle is in progress, data corruption may result.

$V_{PPH}$ must be applied only when $V_{CC}$ is stable and in the $V_{CC,min}$ to $V_{CC,max}$ voltage range.

**Figure 32: Power-Up Timing**

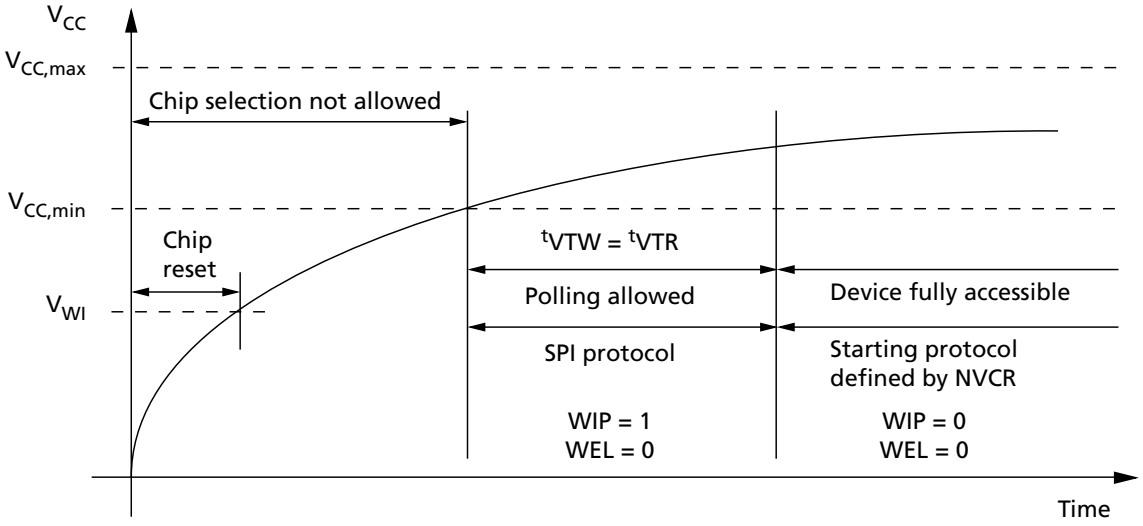



Micron Technology, Inc. reserves the right to change products or specifications without notice.
© 2012 Micron Technology, Inc. All rights reserved.

**Table 31: Power-Up Timing and $V_{WI}$ Threshold**

Note 1 applies to entire table

| Symbol | Parameter | Min | Max | Unit |
|---|---|---|---|---|
| $^{t}$VTR | $V_{CC,min}$ to read | – | 150 | µs |
| $^{t}$VTW | $V_{CC,min}$ to device fully accessible | – | 150 | µs |
| $V_{WI}$ | Write inhibit voltage | 1.3 | 1.5 | V |

Note: 1. Parameters listed are characterized only.

## Power Loss Rescue Sequence

If a power loss occurs during a WRITE NONVOLATILE CONFIGURATION REGISTER command, after the next power-on, the device might begin in an undetermined state (XIP mode or an unnecessary protocol). If this happens, until the next power-up, a rescue sequence must reset the device to a fixed state (extended SPI protocol without XIP). After the rescue sequence, the issue should be resolved by running the WRITE NONVOLATILE CONFIGURATION REGISTER command again. The rescue sequence is composed of two parts that must be run in the correct order. During the entire sequence, $^{t}$SHSL2 must be at least 50ns. The first part of the sequence is DQ0 (PAD DATA) and DQ3 (PAD HOLD) equal to 1 for the situations listed below:

- 7 clock cycles within S# LOW (S# becomes HIGH before 8th clock cycle)
- + 13 clock cycles within S# LOW (S# becomes HIGH before 14th clock cycle)
- + 25 clock cycles within S# LOW (S# becomes HIGH before 26th clock cycle)

The second part of the sequence is exiting from dual or quad SPI protocol by using the following FFh sequence: DQ0 and DQ3 equal to 1 for 8 clock cycles within S# LOW; S# becomes HIGH before 9th clock cycle.

After this two-part sequence the extended SPI protocol is active.


Micron Technology, Inc. reserves the right to change products or specifications without notice.
© 2012 Micron Technology, Inc. All rights reserved.

# AC Reset Specifications

### Table 32: AC RESET Conditions

Note 1 applies to entire table

| Parameter | Symbol | Conditions | Min | Typ | Max | Unit |
|---|---|---|---|---|---|---|
| Reset pulse width | $^{t}$RLRH[2] | | 50 | – | – | ns |
| Reset recovery time | $^{t}$RHSL | Device deselected (S# HIGH) and is in XIP mode | – | – | 40 | ns |
| | | Device deselected (S# HIGH) and is in standby mode | – | – | 40 | ns |
| | | Device deselected (S# HIGH) and is in deep power-down mode | – | – | 30 | µs |
| | | Commands are being decoded and any READ operation or WRITE operation to volatile registers is in progress | – | – | 40 | ns |
| | | Any device array PROGRAM/ERASE/SUSPEND/RESUME, PROGRAM OTP, NONVOLATILE SECTOR LOCK, and ERASE NONVOLATILE SECTOR LOCK ARRAY operations are in progress | – | – | 30 | µs |
| | | WRITE STATUS REGISTER operation is in progress | – | $^{t}$W | – | ms |
| | | WRITE NONVOLATILE CONFIGURATION REGISTER operation is in progress | – | $^{t}$WNVCR | – | ms |
| | | On completion or suspension of a SUBSECTOR ERASE operation | – | $^{t}$SSE | – | s |
| Software reset recovery time | $^{t}$SHSL3 | Device deselected (S# HIGH) and is in standby mode | – | – | 90 | ns |
| | | Device deselected (S# HIGH) and is in deep power-down mode | | | 30 | µs |
| | | On completion of any device array PROGRAM/ERASE/SUSPEND/RESUME, SECTOR ERASE, PROGRAM OTP, PAGE PROGRAM, DUAL INPUT FAST PROGRAM, EXTENDED DUAL INPUT FAST PROGRAM, QUAD INPUT FAST PROGRAM, or EXTENDED QUAD INPUT FAST PROGRAM operation | – | – | 30 | µs |
| | | On completion or suspension of a WRITE STATUS REGISTER operation | – | $^{t}$W | – | ms |
| | | On completion or suspension of a WRITE NONVOLATILE CONFIGURATION REGISTER operation | – | $^{t}$WNVCR | – | ms |
| | | On completion or suspension of a SUBSECTOR ERASE operation | – | $^{t}$SSE | – | s |
| S# deselect to reset valid | $^{t}$SHRV | Deselect to reset valid in quad output or in QIO-SPI | 2 | – | – | ns |

Notes: 1. Values are guaranteed by characterization; not 100% tested.
2. The device reset is possible but not guaranteed if $^{t}$RLRH < 50ns.


Micron Technology, Inc. reserves the right to change products or specifications without notice.
© 2012 Micron Technology, Inc. All rights reserved.

**Figure 33: Reset AC Timing During PROGRAM or ERASE Cycle**

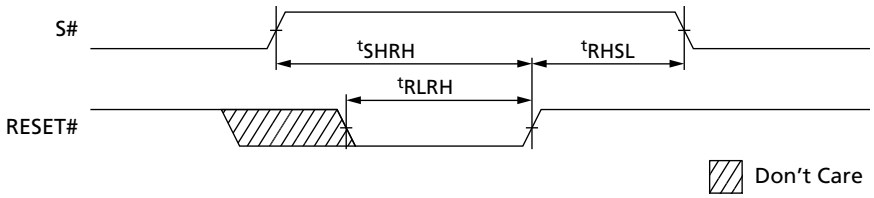


**Figure 34: Reset Enable**

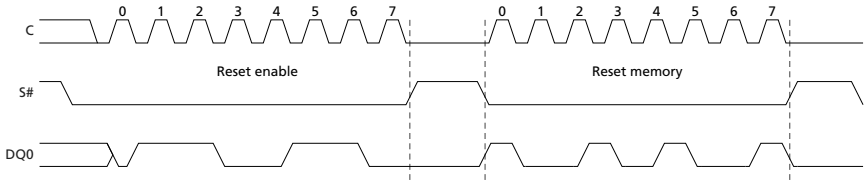


**Figure 35: Serial Input Timing**

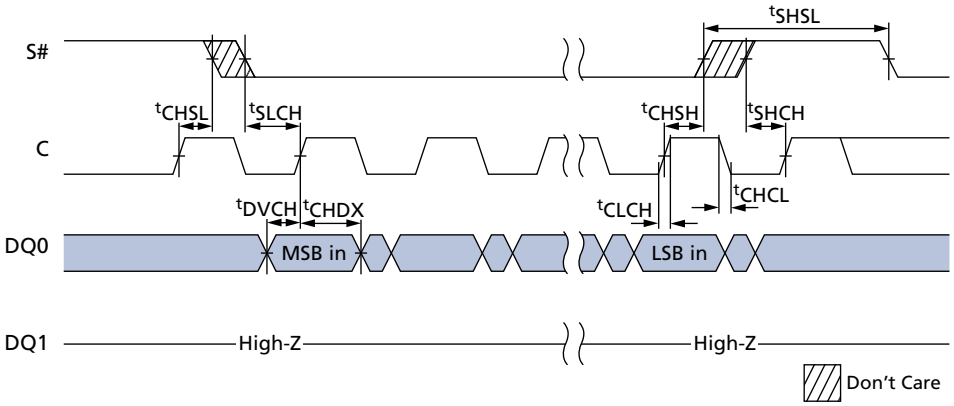



Micron Technology, Inc. reserves the right to change products or specifications without notice.
© 2012 Micron Technology, Inc. All rights reserved.

**Figure 36: Write Protect Setup and Hold During WRITE STATUS REGISTER Operation (SRWD = 1)**

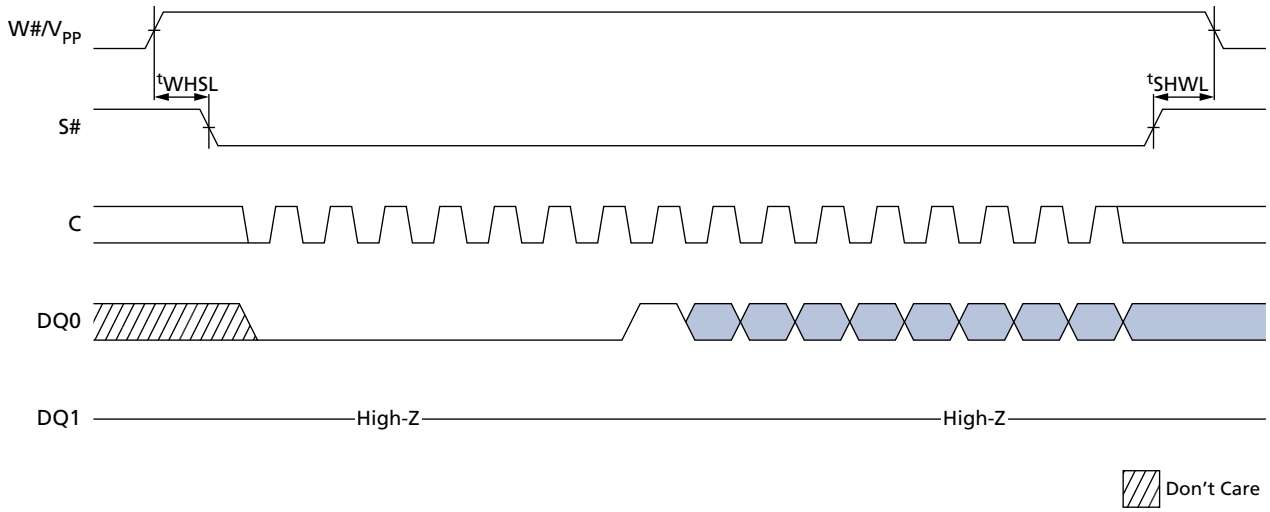



Micron Technology, Inc. reserves the right to change products or specifications without notice.
© 2012 Micron Technology, Inc. All rights reserved.

**Figure 37: Hold Timing**

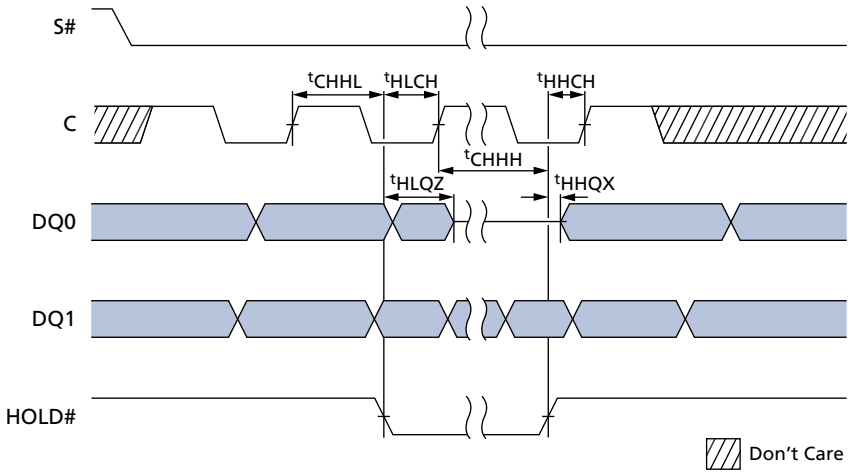


**Figure 38: Output Timing**

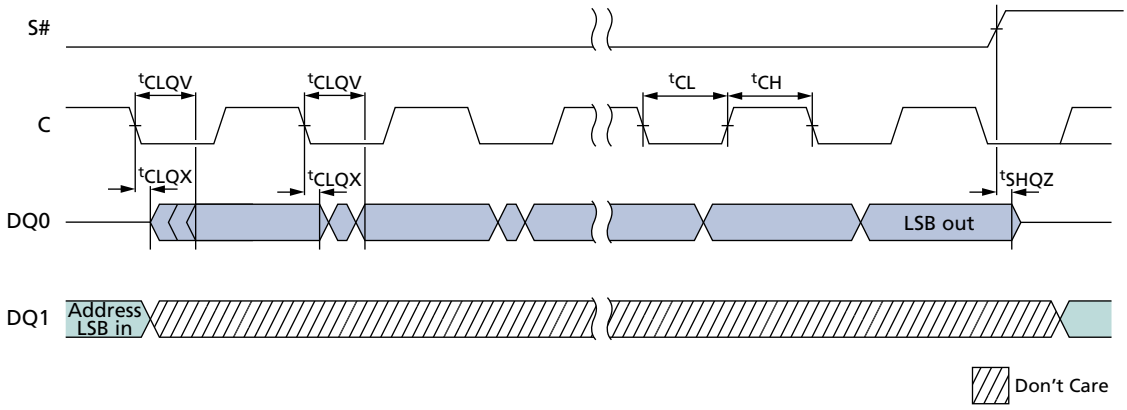



Micron Technology, Inc. reserves the right to change products or specifications without notice.
© 2012 Micron Technology, Inc. All rights reserved.

**Figure 39: $V_{PPH}$ Timing**

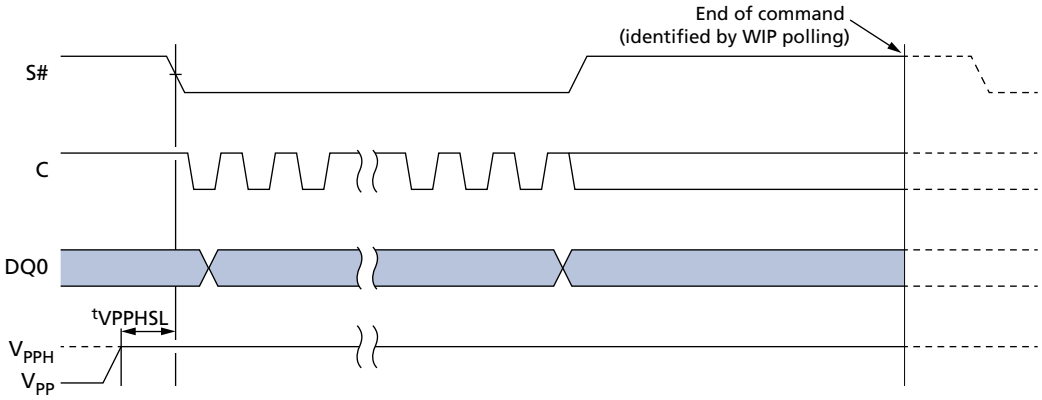



Micron Technology, Inc. reserves the right to change products or specifications without notice.
© 2012 Micron Technology, Inc. All rights reserved.

# Absolute Ratings and Operating Conditions

Stresses greater than those listed may cause permanent damage to the device. This is a stress rating only. Exposure to absolute maximum rating and operating conditions for extended periods may adversely affect reliability. Stressing the device beyond the absolute maximum ratings may cause permanent damage.

### Table 33: Absolute Ratings

| Symbol | Parameter | Min | Max | Units | Notes |
|---|---|---|---|---|---|
| $T_{STG}$ | Storage temperature | –65 | 150 | °C | |
| $T_{LEAD}$ | Lead temperature during soldering | – | See note 1 | °C | |
| $V_{CC}$ | Supply voltage | –0.6 | 2.4 | V | |
| $V_{PP}$ | Fast program/erase voltage | –0.2 | 10 | V | |
| $V_{IO}$ | Input/output voltage with respect to ground | –0.6 | $V_{CC}$ + 0.6 | V | 2 |
| $V_{ESD}$ | Electrostatic discharge voltage (human body model) | –2000 | 2000 | V | 3 |

Notes:
1. Compliant with JEDEC Standard J-STD-020C (for small-body, Sn-Pb or Pb assembly), RoHS, and the European directive on Restrictions on Hazardous Substances (RoHS) 2002/95/EU.
2. For periods of less than 2ns, $V_{IL}$ can undershoot to –1.0V and $V_{IH}$ can overshoot to $V_{CC}$ +1.0V.
3. JEDEC Standard JESD22-A114A (C1 = 100pF, R1 = 1500Ω, R2 = 500Ω).

### Table 34: Operating Conditions

| Symbol | Parameter | Min | Max | Units |
|---|---|---|---|---|
| $V_{CC}$ | Supply voltage | 1.7 | 2.0 | V |
| $V_{PPH}$ | Supply voltage on $V_{PP}$ | 8.5 | 9.5 | V |
| $T_A$ | Ambient operating temperature | –40 | 85 | °C |
| $T_A$ | Ambient operating temperature, automotive | –40 | 125 | °C |

### Table 35: Input/Output Capacitance

Note 1 applies to entire table

| Symbol | Description | Test Condition | Min | Max | Units |
|---|---|---|---|---|---|
| $C_{IN/OUT}$ | Input/output capacitance (DQ0/DQ1/DQ2/DQ3) | $V_{OUT}$ = 0V | – | 8 | pF |
| $C_{IN}$ | Input capacitance (other pins) | $V_{IN}$ = 0V | – | 6 | pF |

Note:
1. These parameters are sampled only, not 100% tested. $T_A$ = 25°C at 54 MHz.


Micron Technology, Inc. reserves the right to change products or specifications without notice.
© 2012 Micron Technology, Inc. All rights reserved.

**Table 36: AC Timing Input/Output Conditions**

| Symbol | Description | Min | Max | Units | Notes |
|---|---|---|---|---|---|
| $C_L$ | Load capacitance | 30 | 30 | pF | 1 |
| – | Input rise and fall times | – | 5 | ns | |
| | Input pulse voltages | $0.2V_{CC}$ to $0.8V_{CC}$ | | V | 2 |
| | Input timing reference voltages | $0.3V_{CC}$ to $0.7V_{CC}$ | | V | |
| | Output timing reference voltages | $V_{CC}/2$ | $V_{CC}/2$ | V | |

Notes: 1. Output buffers are configurable by user.
2. For quad/dual operations: 0V to $V_{CC}$.

**Figure 40: AC Timing Input/Output Reference Levels**

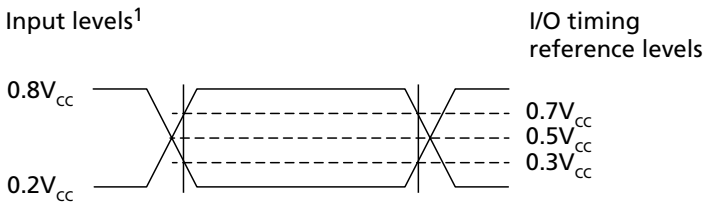


Note: 1. $0.8V_{CC} = V_{CC}$ for dual/quad operations; $0.2V_{CC} = 0V$ for dual/quad operations.


Micron Technology, Inc. reserves the right to change products or specifications without notice.
© 2012 Micron Technology, Inc. All rights reserved.

# DC Characteristics and Operating Conditions

### Table 37: DC Current Characteristics and Operating Conditions

| Parameter | Symbol | Test Conditions | Min | Max | Unit |
|---|---|---|---|---|---|
| Input leakage current | $I_{LI}$ | | – | ±2 | µA |
| Output leakage current | $I_{LO}$ | | – | ±2 | µA |
| Standby current | $I_{CC1}$ | S = $V_{CC}$, $V_{IN}$ = $V_{SS}$ or $V_{CC}$ | – | 100 | µA |
| Deep power-down current | $I_{CC2}$ | S = $V_{CC}$, $V_{IN}$ = $V_{SS}$ or $V_{CC}$ | – | 10 | µA |
| Operating current (fast-read extended I/O) | $I_{CC3}$ | C = 0.1$V_{CC}$/0.9$V_{CC}$ at 108 MHz, DQ1 = open | – | 15 | mA |
| | | C = 0.1$V_{CC}$/0.9$V_{CC}$ at 54 MHz, DQ1 = open | – | 6 | mA |
| Operating current (fast-read dual I/O) | | C = 0.1$V_{CC}$/0.9$V_{CC}$ at 108 MHz | – | 18 | mA |
| Operating current (fast-read quad I/O) | | C = 0.1$V_{CC}$/0.9$V_{CC}$ at 108 MHz | – | 20 | mA |
| Operating current (program) | $I_{CC4}$ | S# = $V_{CC}$ | – | 20 | mA |
| Operating current (write status register) | $I_{CC5}$ | S# = $V_{CC}$ | – | 20 | mA |
| Operating current (erase) | $I_{CC6}$ | S# = $V_{CC}$ | – | 20 | mA |

### Table 38: DC Voltage Characteristics and Operating Conditions

| Parameter | Symbol | Conditions | Min | Max | Unit | Notes |
|---|---|---|---|---|---|---|
| Input low voltage | $V_{IL}$ | | –0.5 | 0.3$V_{CC}$ | V | 1 |
| Input high voltage | $V_{IH}$ | | 0.7$V_{CC}$ | $V_{CC}$ + 0.4 | V | 1 |
| Output low voltage | $V_{OL}$ | $I_{OL}$ = 1.6mA | – | 0.4 | V | |
| Output high voltage | $V_{OH}$ | $I_{OH}$ = –100µA | $V_{CC}$ - 0.2 | – | V | |

Note: 1. For periods of less than 2ns, $V_{IL}$ can undershoot to –1.0V and $V_{IH}$ can overshoot to $V_{CC}$ +1.0V.


Micron Technology, Inc. reserves the right to change products or specifications without notice.
© 2012 Micron Technology, Inc. All rights reserved.

# AC Characteristics and Operating Conditions

**Table 39: AC Characteristics and Operating Conditions**

| Parameter | Symbol | Min | Typ[2] | Max | Unit | Notes |
|---|---|---|---|---|---|---|
| Clock frequency for all commands other than READ (SPI-ER, QIO-SPI protocol) | $^{f}C$ | DC | – | 108 | MHz | |
| Clock frequency for READ commands | $^{f}R$ | DC | – | 54 | MHz | |
| Clock HIGH time | $^{t}CH$ | 4 | – | – | ns | 1 |
| Clock LOW time | $^{t}CL$ | 4 | – | – | ns | 2 |
| Clock rise time (peak-to-peak) | $^{t}CLCH$ | 0.1 | – | – | V/ns | 3, 4 |
| Clock fall time (peak-to-peak) | $^{t}CHCL$ | 0.1 | – | – | V/ns | 3, 4 |
| S# active setup time (relative to clock) | $^{t}SLCH$ | 4 | – | – | ns | |
| S# not active hold time (relative to clock) | $^{t}CHSL$ | 4 | – | – | ns | |
| Data in setup time | $^{t}DVCH$ | 2 | – | – | ns | |
| Data in hold time | $^{t}CHDX$ | 3 | – | – | ns | |
| S# active hold time (relative to clock) | $^{t}CHSH$ | 4 | – | – | ns | |
| S# not active setup time (relative to clock) | $^{t}SHCH$ | 4 | – | – | ns | |
| S# deselect time after a READ command | $^{t}SHSL1$ | 20 | – | – | ns | |
| S# deselect time after a nonREAD command | $^{t}SHSL2$ | 50 | – | – | ns | |
| Output disable time | $^{t}SHQZ$ | – | – | 8 | ns | 3 |
| Clock LOW to output valid under 30pF | $^{t}CLQV$ | – | – | 7 | ns | |
| Clock LOW to output valid under 10pF | | – | – | 5 | ns | |
| Output hold time (clock LOW) | $^{t}CLQX$ | 1 | – | – | ns | |
| Output hold time (clock HIGH) | $^{t}CHQX$ | 1 | – | – | ns | |
| HOLD command setup time (relative to clock) | $^{t}HLCH$ | 4 | – | – | ns | |
| HOLD command hold time (relative to clock) | $^{t}CHHH$ | 4 | – | – | ns | |
| HOLD command setup time (relative to clock) | $^{t}HHCH$ | 4 | – | – | ns | |
| HOLD command hold time (relative to clock) | $^{t}CHHL$ | 4 | – | – | ns | |
| HOLD command to output Low-Z | $^{t}HHQX$ | – | – | 8 | ns | 3 |
| HOLD command to output High-Z | $^{t}HLQZ$ | – | – | 8 | ns | 3 |
| Write protect setup time | $^{t}WHSL$ | 20 | – | – | ns | 5 |
| Write protect hold time | $^{t}SHWL$ | 100 | – | – | ns | 5 |
| Enhanced $V_{PPH}$ HIGH to S# LOW for extended and dual I/O page program | $^{t}VPPHSL$ | 200 | – | – | ns | 6 |
| WRITE STATUS REGISTER cycle time | $^{t}W$ | – | 1.3 | 8 | ms | |
| Write NONVOLATILE CONFIGURATION REGISTER cycle time | $^{t}WNVCR$ | – | 0.2 | 3 | s | |
| CLEAR FLAG STATUS REGISTER cycle time | $^{t}CFSR$ | – | 40 | – | ns | |
| WRITE VOLATILE CONFIGURATION REGISTER cycle time | $^{t}WVCR$ | – | 40 | – | ns | |
| WRITE VOLATILE ENHANCED CONFIGURATION REGISTER cycle time | $^{t}WRVECR$ | – | 40 | – | ns | |


Micron Technology, Inc. reserves the right to change products or specifications without notice.
© 2012 Micron Technology, Inc. All rights reserved.

**Table 39: AC Characteristics and Operating Conditions (Continued)**

| Parameter | Symbol | Min | Typ[2] | Max | Unit | Notes |
|---|---|---|---|---|---|---|
| PAGE PROGRAM cycle time (256 bytes) | $^{t}$PP | – | 0.5 | 5 | ms | 7 |
| PAGE PROGRAM cycle time (*n* bytes) | | – | int(n/8) × 0.015[8] | 5 | ms | 7 |
| PAGE PROGRAM cycle time, $V_{PP} = V_{PPH}$ (256 bytes) | | – | 0.4 | 5 | ms | 7 |
| PROGRAM OTP cycle time (64 bytes) | | – | 0.2 | – | ms | 7 |
| Subsector ERASE cycle time | $^{t}$SSE | – | 0.25 | 0.8 | s | |
| Sector ERASE cycle time | $^{t}$SE | – | 0.7 | 3 | s | |
| Sector ERASE cycle time (with $V_{PP} = V_{PPH}$) | | – | 0.6 | 3 | s | |
| Bulk ERASE cycle time | $^{t}$BE | – | 120 | 240 | s | |
| Bulk ERASE cycle time (with $V_{PP} = V_{PPH}$) | | – | 100 | 240 | s | |
| S# to deep power-down | $^{t}$DP | – | – | 3 | µs | |
| S# HIGH to standby | $^{t}$RDP | – | – | 30 | µs | |

Notes:
1. $^{t}$CH + $^{t}$CL must add up to 1/$^{f}$C.
2. Typical values given for $T_A$ = 25 °C.
3. Value guaranteed by characterization; not 100% tested.
4. Expressed as a slew-rate.
5. Only applicable as a constraint for a WRITE STATUS REGISTER command when STATUS REGISTER WRITE is set to 1.
6. $V_{PPH}$ should be kept at a valid level until the PROGRAM or ERASE operation has completed and its result (success or failure) is known.
7. When using the PAGE PROGRAM command to program consecutive bytes, optimized timings are obtained with one sequence including all the bytes versus several sequences of only a few bytes (1 < n < 256).
8. int(A) corresponds to the upper integer part of A. For example int(12/8) = 2, int(32/8) = 4 int(15.3) = 16.


Micron Technology, Inc. reserves the right to change products or specifications without notice.
© 2012 Micron Technology, Inc. All rights reserved.

# Package Dimensions

**Figure 41: V-PDFN-8 6mm x 5mm Sawn (MLP8) – Package Code: F7**

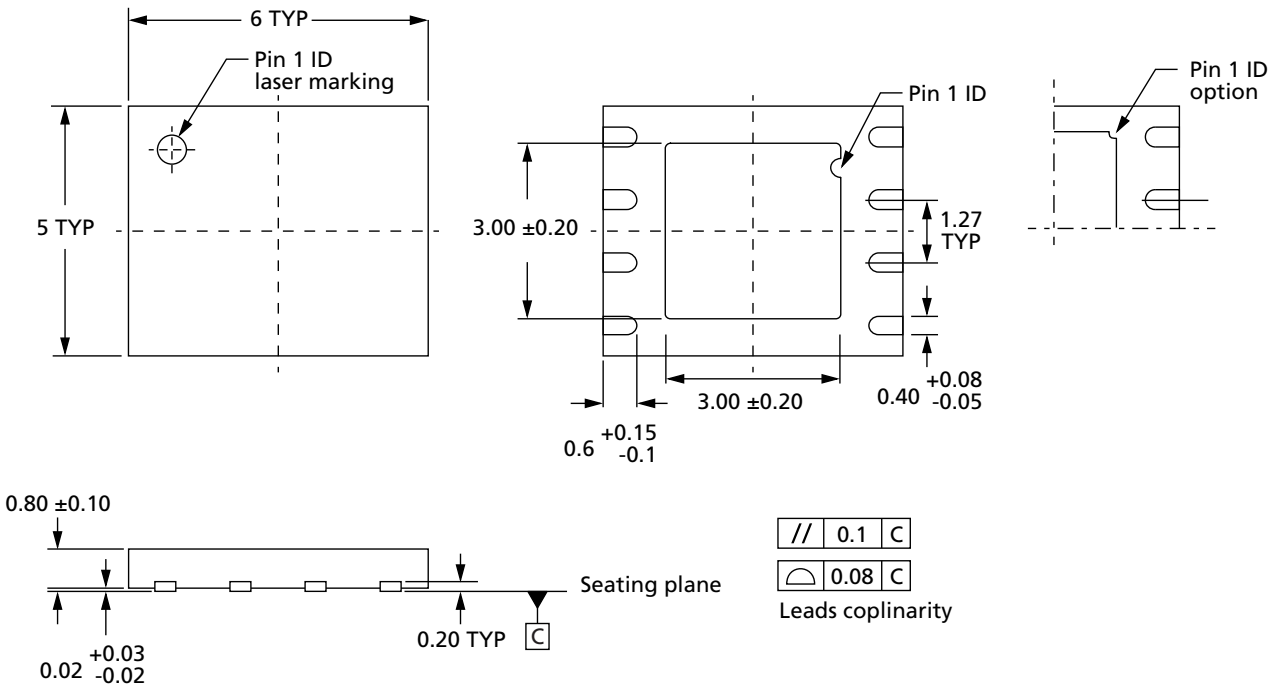


Notes:
1. All dimensions are in millimeters.
2. See Part Number Ordering Information for complete package names and details.


Micron Technology, Inc. reserves the right to change products or specifications without notice.
© 2012 Micron Technology, Inc. All rights reserved.

**Figure 42: V-PDFN-8 8mm x 6mm (MLP8) – Package Code: F8**

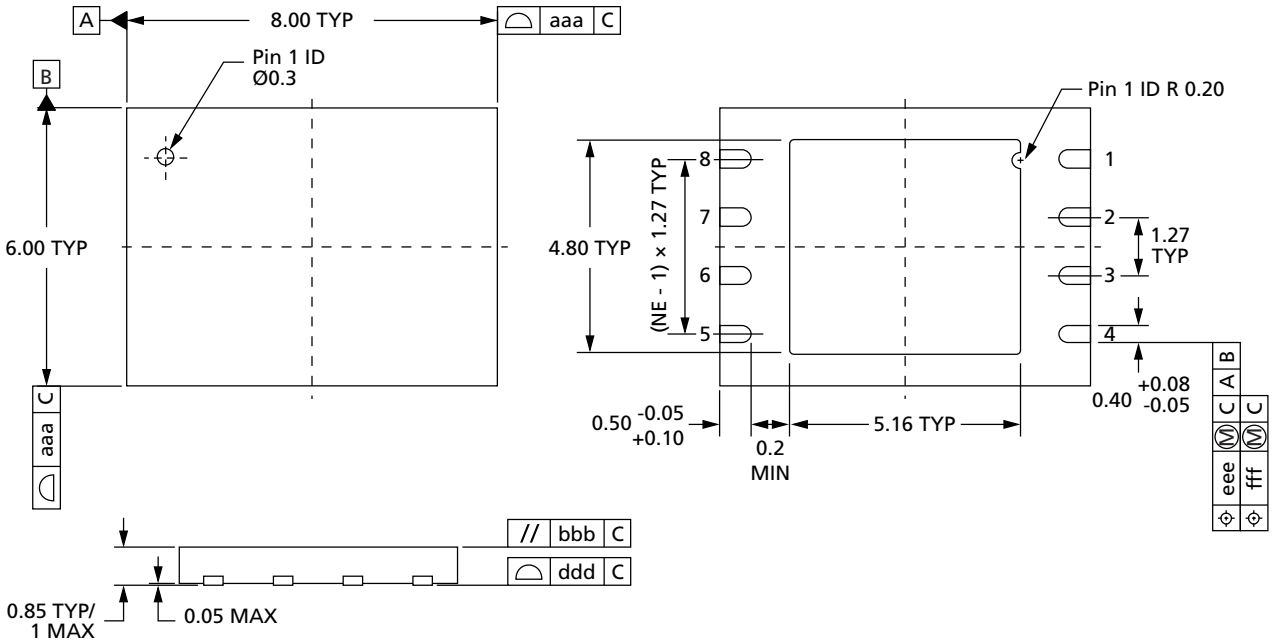


Notes:
1. All dimensions are in millimeters.
2. See Part Number Ordering Information for complete package names and details.


Micron Technology, Inc. reserves the right to change products or specifications without notice.
© 2012 Micron Technology, Inc. All rights reserved.

**Figure 43: T-PBGA-24b05 6mm x 8mm – Package Code: 12**

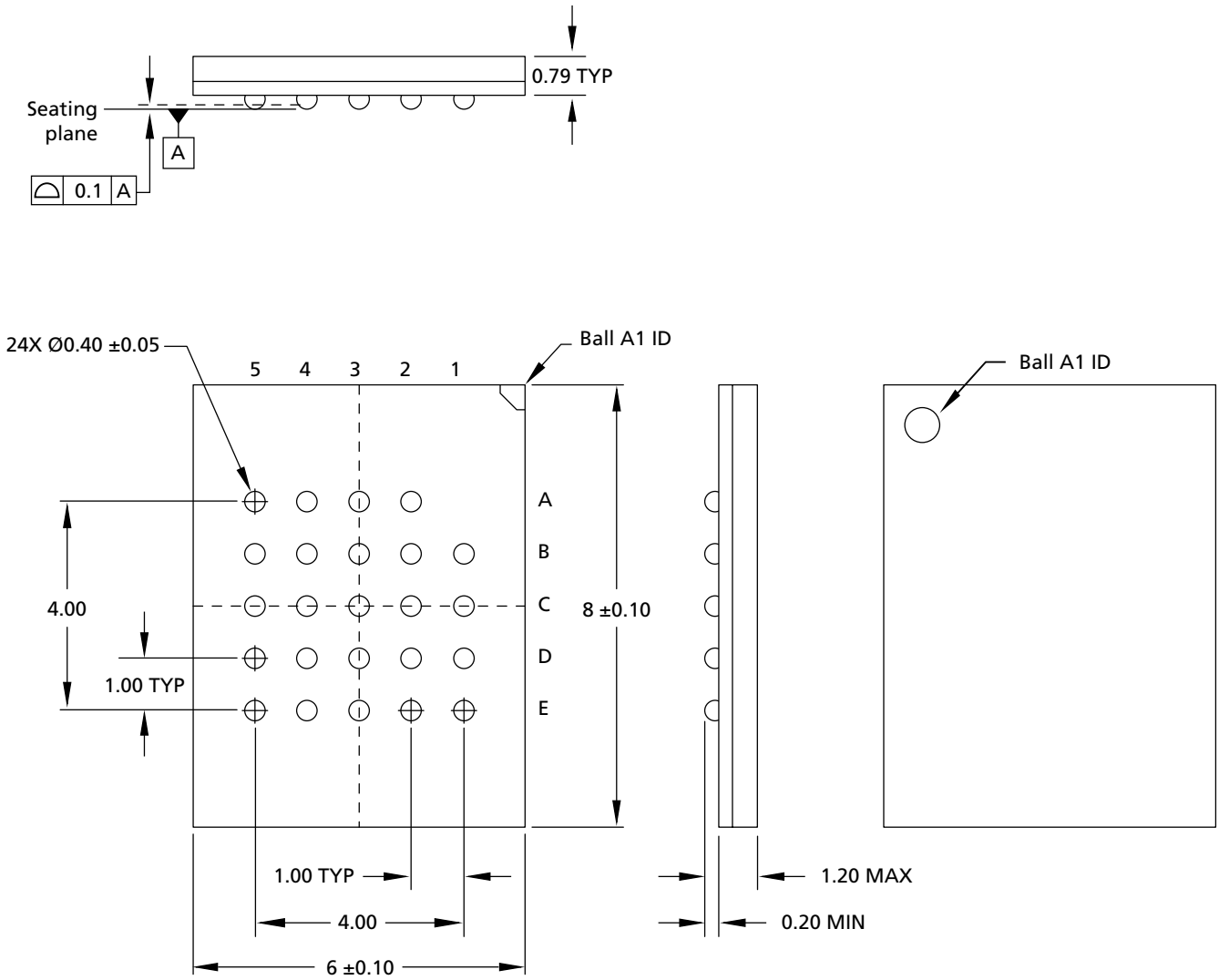


Notes: 1. All dimensions are in millimeters.
2. See Part Number Ordering Information for complete package names and details.


Micron Technology, Inc. reserves the right to change products or specifications without notice.
© 2012 Micron Technology, Inc. All rights reserved.

**Figure 44: SOP2-16 (300 mils body width) – Package Code: SF**

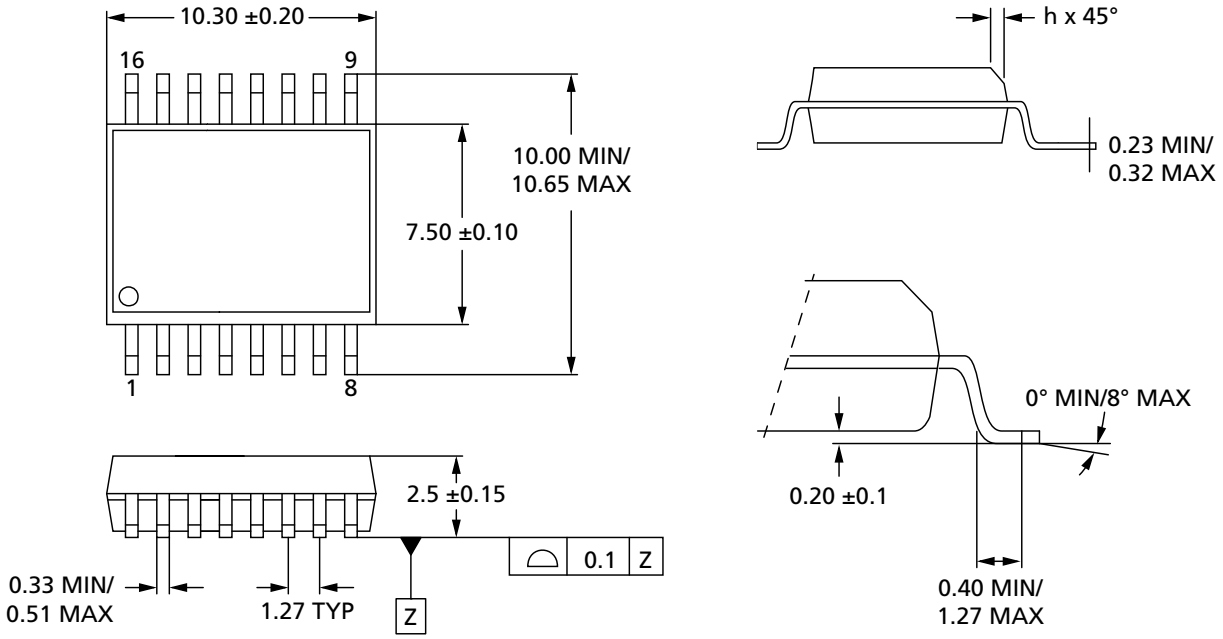


Notes:
1. All dimensions are in millimeters.
2. See Part Number Ordering Information for complete package names and details.


Micron Technology, Inc. reserves the right to change products or specifications without notice.
© 2012 Micron Technology, Inc. All rights reserved.

**Figure 45: SOP2-8 (208 mils body width) – Package Code: SE**

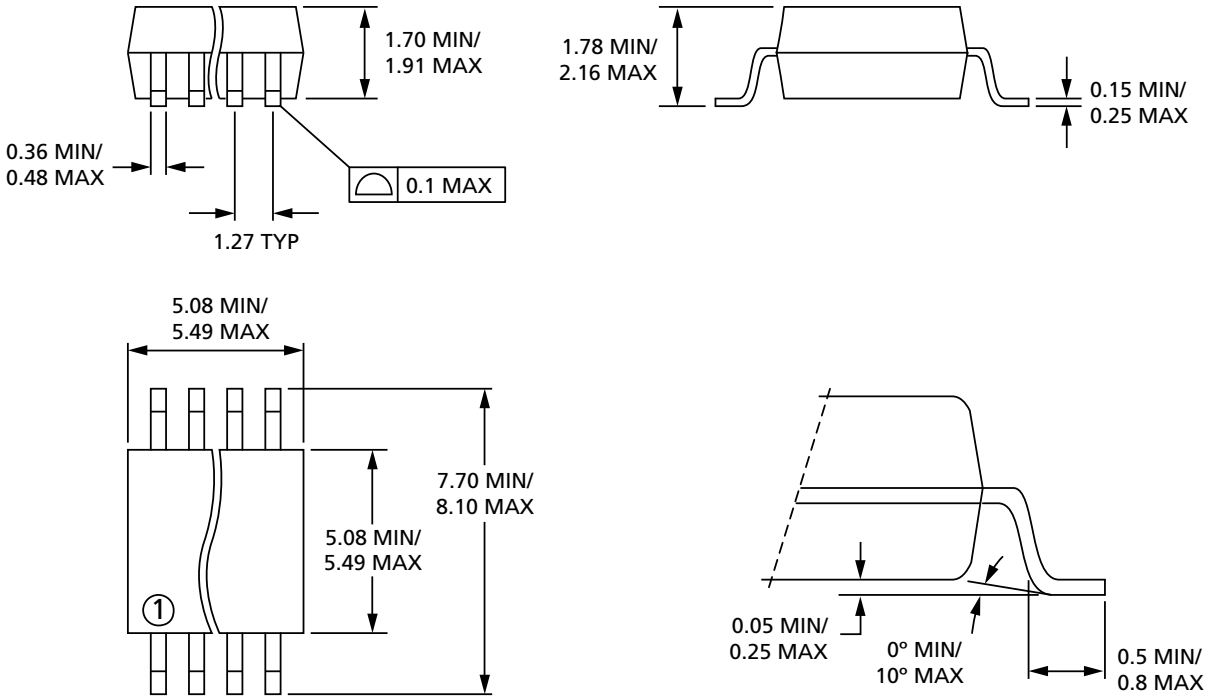


Notes:
1. All dimensions are in millimeters.
2. See Part Number Ordering Information for complete package names and details.


Micron Technology, Inc. reserves the right to change products or specifications without notice.
© 2012 Micron Technology, Inc. All rights reserved.

# Part Number Ordering Information

Micron Serial NOR Flash devices are available in different configurations and densities. Verify valid part numbers by using Micron's part catalog search at micron.com. To compare features and specifications by device type, visit micron.com/products. Contact the factory for devices not found.

For more information on how to identify products and top-side marking by the process identification letter, refer to technical note TN-12-24, "Serial Flash Memory Device Marking for the M25P, M25PE, M25PX, and N25Q Product Families."

**Table 40: Part Number Information**

| Part Number Category | Category Details | Notes |
|---|---|---|
| Device type | N25Q = Serial NOR Flash memory, Multiple Input/Output (Single, Dual, Quad I/O), XIP | |
| Density | 128 = 128Mb | |
| Technology | A = 65nm | |
| Feature set | 1 = Byte addressability; HOLD pin; Micron XIP | |
| | 2 = Byte addressability; HOLD pin; Basic XIP | |
| | 3 = Byte addressability; RST# pin; Micron XIP | |
| | 4 = Byte addressability; RST# pin; Basic XIP | |
| Operating voltage | 1 = $V_{CC}$ = 1.7 to 2.0V | |
| Block structure | E = Uniform (64KB and 4KB) | |
| Package (RoHS-compliant) | F7 = V-PDFN-8 6mm x 5mm Sawn (MLP8 6mm x 5mm)<br>F8 = V-PDFN-8 8mm x 6mm (MLP8 8mm x 6mm)<br>12 = T-PBGA-24b05 6mm x 8mm<br>SF = SOP2-16 300 mils body width (SO16W)<br>SE = SOP2-8 208 mils body width (SO8W) | |
| Temperature and test flow | 4 = IT: –40°C to +85°C; Device tested with standard test flow<br>A = Automotive temperature range: –40 to +125°C; Device tested with high reliability certified test flow<br>H = IT: –40°C to +85°C; Device tested with high reliability certified test flow | |
| Security features | 0 = Default | 1 |
| Shipping material | E = Tray<br>F = Tape and reel<br>G = Tube | |

Note: 1. Additional secure options are available upon customer request.

**Table 41: Package Details**

| Micron SPI and JEDEC Category | Shortened Package Name | Package Description | M25P M45PE Symbol | N25Q Symbol | M25P M45PE Package Names | Alternate Package Name |
|---|---|---|---|---|---|---|
| V-PDFN-8 6mm x 5mm Sawn | DFN/6mm x 5mm Sawn | Very thin, plastic small-outline, 8 terminal pads (no leads), 6mm x 5mm Sawn | MS | F7 | MLP8, DFN8, VDFPN8, VFQFPN8 | V-PSON1-8/6mm x 5mm Sawn, VSON |


Micron Technology, Inc. reserves the right to change products or specifications without notice.
© 2012 Micron Technology, Inc. All rights reserved.

**Table 41: Package Details (Continued)**

| Micron SPI and JEDEC Category | Shortened Package Name | Package Description | M25P M45PE Symbol | N25Q Symbol | M25P M45PE Package Names | Alternate Package Name |
|---|---|---|---|---|---|---|
| V-PDFN-8 8mm x 6mm | DFN/8mm x 6mm | Very thin, plastic small outline, 8 terminal pads (no leads), 8mm x 6mm | ME | F8 | MLP8, VDFPN8 | V-PSON1-8/8mm x 6mm, VSON |
| T-PBGA-24b05/6mm x 8mm | TBGA 24 | Thin plastic ball grid array, 24 balls, 6mm x 8mm | ZM | 12 | TBGA24 6x8mm | |
| SOP2- 16/300 mil | SO16W | Small-outline integrated circuit, 16 pins, wide (300 mil) | MF | SF | SO16 wide 300 mil body width | SOIC-16/300 mil, SOP 16L 300 mil |
| SOP2- 8/208 mil | SO8W | Small-outline integrated circuit, 8-pins, wide (208 mil) | MW | SE | SO8 wide 208 mil body width | |


Micron Technology, Inc. reserves the right to change products or specifications without notice.
© 2012 Micron Technology, Inc. All rights reserved.

# Revision History

## Rev. O – 2/2014

- Added footnote to Absolute Ratings and DC Voltage Characteristics and Operating Conditions tables, stating that $V_{IL}$ and $V_{IH}$ can exceed minimum and maximum values for periods of less than 2ns

## Rev. N – 1/2014

- Corrected RESET ENABLE and RESET MEMORY command timing diagram

## Rev. M – 6/2013

- Updated VDFPN8 signal assignment figure by adding RESET#

## Rev. L – 1/2013

- Updated SOP2-8 (208 mils body width) - Package Code: SE in Package Dimensions
- Updated the READ ID Operation figure in READ ID Operations
- Updated ERASE Operations
- Added link to part number chart in Part Number Ordering Information
- Updated part numbers in Features

## Rev. K – 6/2012

- Updated $^{t}$SSE specification in AC Reset Conditions table

## Rev. J – 2/2012

- Added deep power-down to AC Reset specifications

## Rev. I – 12/2011

- Updated note for Read ID Data Out table

## Rev. H – 8/2011

- Updated SOP2-8 (208 mils body width) - Package Code: SE in Package Dimensions
- Updated value of $^{t}$SSE in AC Characteristics and Operating Conditions

## Rev. G – 7/2011

- Micron rebrand

## Rev. F – 2/2011

- Updated order information

## Rev. E – 1/2011

- Updated functionality


Micron Technology, Inc. reserves the right to change products or specifications without notice.
© 2012 Micron Technology, Inc. All rights reserved.

## Rev. D – 10/2010

- Added the following packages: F6 = VDFPN8 6 x 5 mm (MLP 6 x 5) (RoHS compliant); SE = SO8W (SO8 208 mils body width) (RoHS compliant)
- Changed the Typical specification for Erase to Suspend and Subsector
- Erase to Suspend in Operations Allowed / Disallowed During Device States
- Added $^{t}$BE with $V_{PP} = V_{PPH}$ and $^{t}$SE with sector erase $V_{PP} = V_{PPH}$, TYP = 0.6s, MAX = 3s to AC Characteristics
- Made miscellaneous text edits

## Rev. C – 2/2010

- Corrected typographical error "iA" to "uA" for $V_{OH}$ in DC Characteristics
- Made the following specification changes in AC Characteristics: $^{t}$W: changed MAX from 15s to 8ms; $^{t}$WNVCR: changed TYP from 1 to 0.2 and MAX from 15 to 3; $^{t}$PP: changed TYP from int(n/8) x 0.025 to int(n/8) x 0.015; $^{t}$SSE: changed TYP from 150ms to 0.2s and MAX from 500ms to 2s; $^{t}$SE: changed TYP from 1s to 0.7s; $^{t}$BE: changed TYP from 256s to 170s and MAX from 770s to 250s

## Rev. B – 5/2009

- Added the TBGA ballout and package information
- Updated PROGRAM/ERASE/SUSPEND operations; Device Protection; Read and Write Volatile Configuration Register; Fast POR; Power-Up Timing graphics; Order Information

## Rev. A – 1/2009

- Initial release

8000 S. Federal Way, P.O. Box 6, Boise, ID 83707-0006, Tel: 208-368-3900
www.micron.com/productsupport Customer Comment Line: 800-932-4992
Micron and the Micron logo are trademarks of Micron Technology, Inc.
All other trademarks are the property of their respective owners.
This data sheet contains minimum and maximum limits specified over the power supply and temperature range set forth herein. Although considered final, these specifications are subject to change, as further product development and data characterization sometimes occur.


Micron Technology, Inc. reserves the right to change products or specifications without notice.
© 2012 Micron Technology, Inc. All rights reserved.