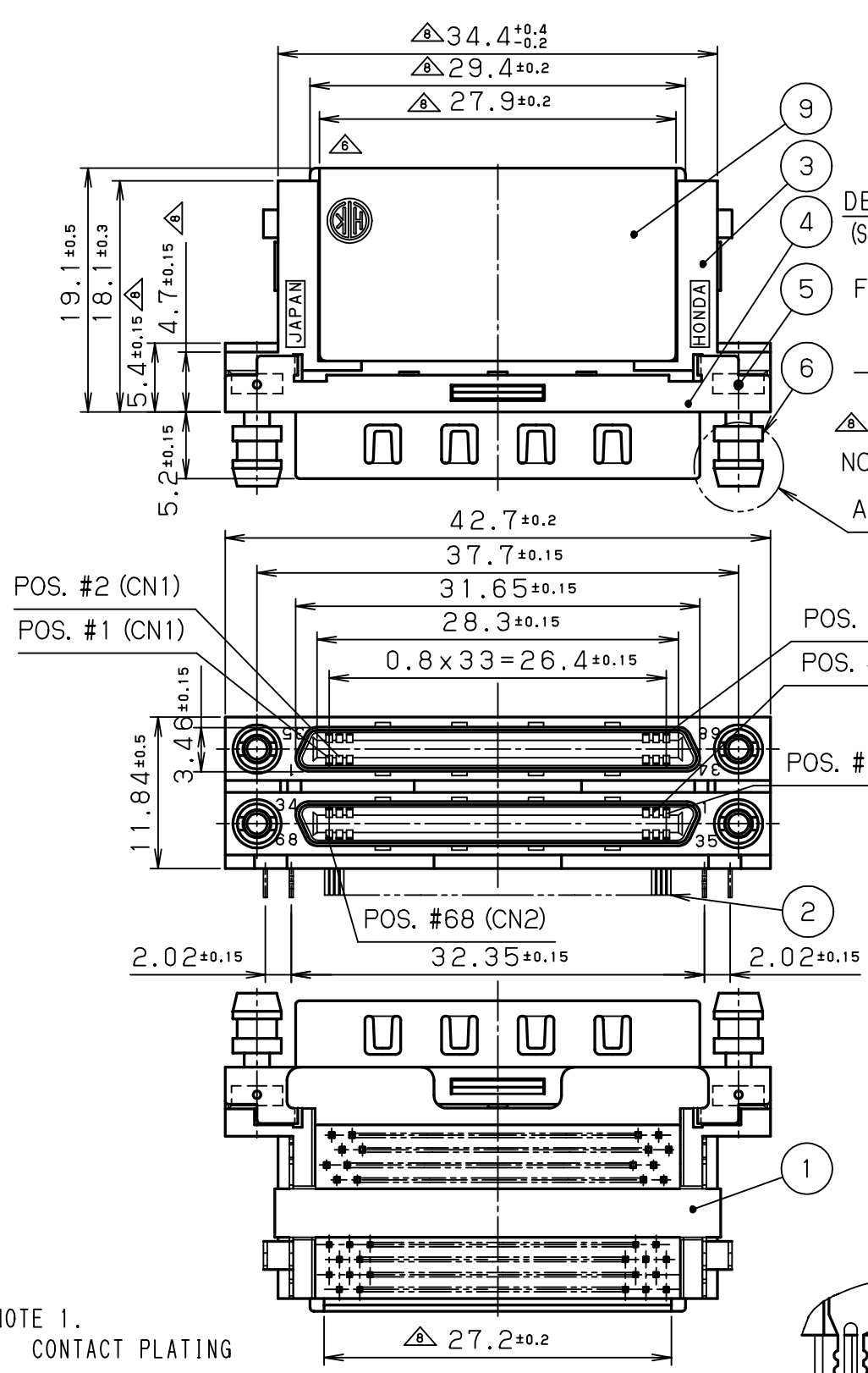


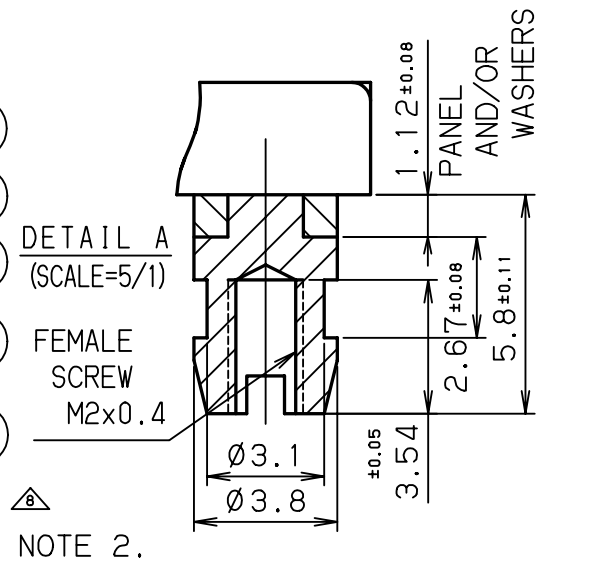


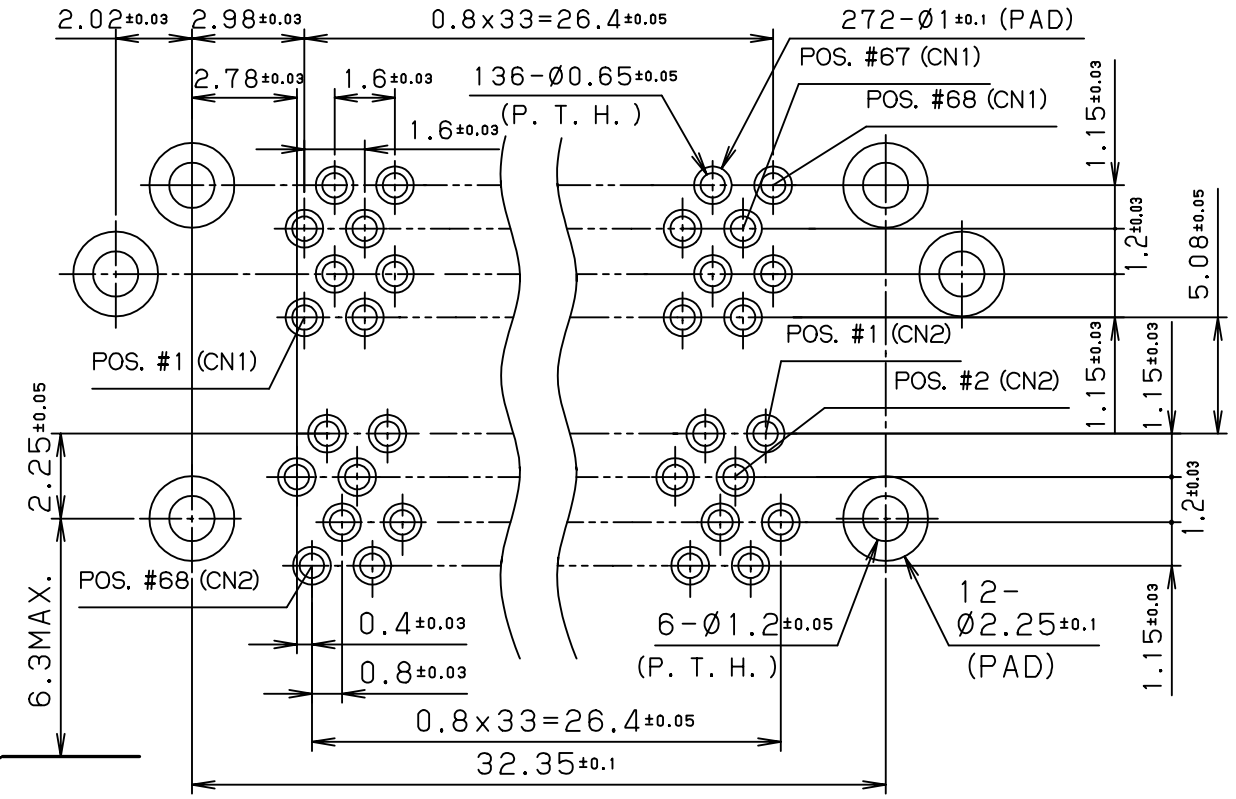


RECOMMENDED P. C. B. LAYOUT t=1.6±0.1 (SCALE=5/1)
(MOUNT SIDE VIEW)

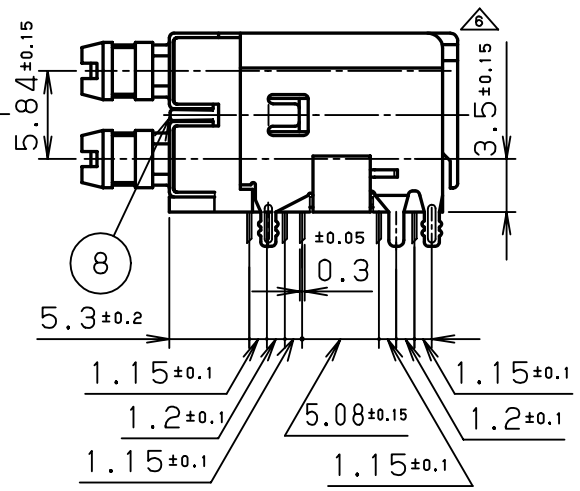


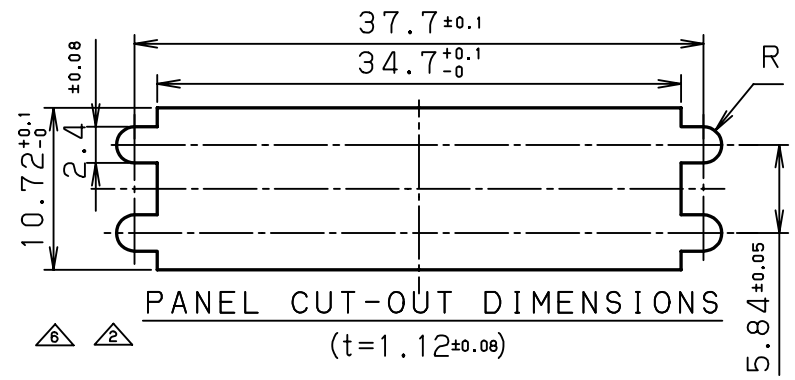


PANEL CUT-OUT DIMENSIONS
(t=1.12±0.08)

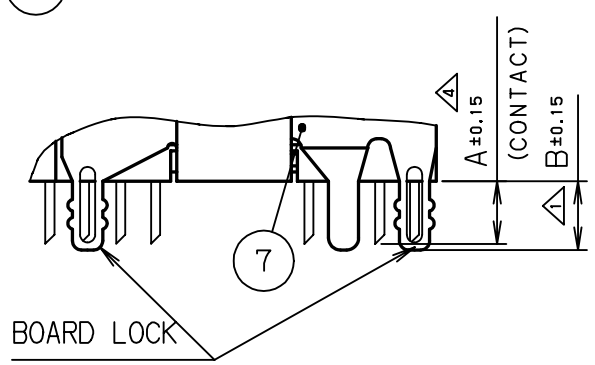


NOTE 1.
CONTACT PLATING

CONTACT AREA:GOLD 0.1 μm MIN.
OVER PALLADIUM/NICKEL 0.5μm

TERMINAL AREA:TIN/LEAD 2.6~5μm
ALL OVER NICKEL UNDERPLATED.

| | | | |
|---|---|---|---|
| HDRA-E68W5LFDT1EC-SL | 2.72 | 3.6 | BLACK |
| HDRA-E68W2LFDT1EC-SL | 3.4 | 3.6 | BROWN |
| HDRA-E68W1LFDT1EC-SL | 2.08 | 2.28 | BLACK |
| PART No. | A | B | COLOR OF BRACKET |

| LTR. | DATE | BY | REV. DESCRIPT | No. | PART NAME | MATERIAL | QTY | FINISH | NOTE |
|---|---|---|---|---|---|---|---|---|---|
| 8 | OCT.25 2002 | Y. K | ADD DIM AND TOLERANCE | 9 | PROTECT COVER | PPS | 1 | | UL94V-0 BLACK |
| 7 | FEB.2 2000 | Y. K | REVISE (ADD TOLERANCE) | 8 | SPACER | STEEL | 1 | NICKEL | |
| 6 | FEB.2 2000 | Y. K | ADD TOLERANCE AND SHAPE | 7 | BOARD LOCK | PHOSPHOR BRONZE | 2 | NICKEL | |
| 5 | AUG.25 1999 | Y. K | COLOR OF BRACKET. | 6 | LOCK SCREW | STEEL | 4 | NICKEL | M2x0.4 SEE NOTE 2 |
| 4 | AUG.6. 1999 | Y. K | ADD P/N | 5 | SQR. NUT | BRASS | 4 | NICKEL | M2x0.4 |
| 3 | DEC.22. 1998 | H. A | ADD THROUGH HOLE. | 4 | SHELL | STEEL | 2 | NICKEL | |
| 2 | NOV.6. 1998 | H. A | CHANGE PANEL CUT OUT DIMENSIONS. | 3 | INSULATOR | PPS | 1 | | UL94V-0 BLACK |
| 1 | JUN.9. 1998 | H. A | CHANGE P/N, SHAPE AND COLOR OF BRACKET. | 2 | CONTACT | PHOSPHOR BRONZE | 136 | SEE NOTE 1 | |
| | | | | 1 | BRACKET | PPS | 1 | | UL94V-0 |

| DATE | SCALE | UNIT | 3RD. A. P |
|---|---|---|---|
| APR.7.1998 | 2 / 1 | mm (INCH) | |
| APP. DATE&REV. | | | |

| DR. | DE. | CHK. | CHK. | APP. |
|---|---|---|---|---|
| Y.KATO | Y.KATO | — | C.NUNOKAWA | H.EBIHARA |

HONDA TSUSHIN KOGYO CO., LTD.

NAME: 0.8mm SPACING 68POS. R/A DUAL STACKING FEMALE CONNECTOR

PART NO.: HDRA-E68W( )LFDT1EC-SL REV. 8H

ID= HDRA-E68W( )LFDT1EC-SL EH