THIS DRAWING IS UNPUBLISHED. RELEASED FOR PUBLICATION , .
© COPYRIGHT By – ALL RIGHTS RESERVED.

| LOC | DIST |
|---|---|
| J | |

REVISIONS

| P | LTR | DESCRIPTION | DATE | DWN | APVD |
|---|---|---|---|---|---|
| | M | REVISED ECR-14-010014 | 15NOV2014 | I.T | W.H |

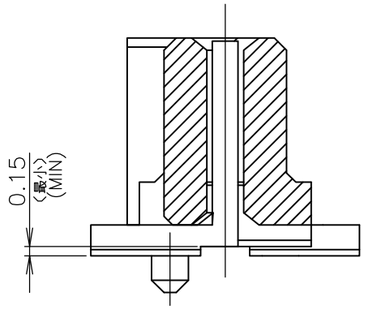


SECT "B"–"B"

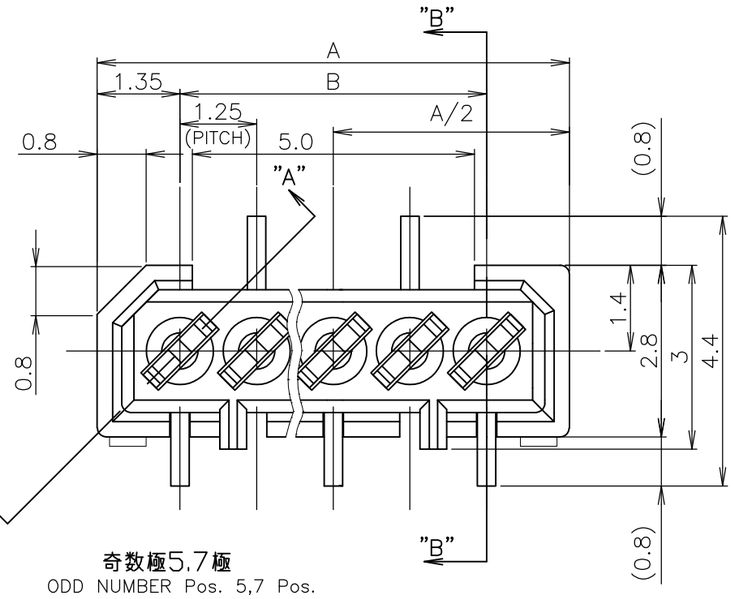


奇数極5,7極
ODD NUMBER Pos. 5,7 Pos.

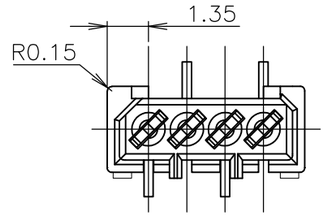


4極 4Pos.
(SCALE 5:1)

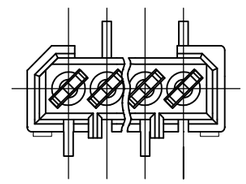

偶数極6,8,10極
EVEN NUMBER Pos.6,8,10 Pos.
(SCALE 5–1)

注記
NOTES
1 嵌合相手製品型番及び、嵌合時寸法は
MATING COUNTER PART NUMBER AND DIMENSIONS
表–1 参照のこと。
AFTER MATING: SEE TABLE 1.

嵌合時寸法: 巾(mm)×高さ(mm)
DIMENSIONS AFTER MATING : WIDE(mm) × HEIGHT(mm)

| | MATING COUNTER CONN 嵌合相手側コネクタ POST HDR ASSY 製品型番 P/N | 高さ H | REC HEADER ASSY SMT V TYPE WITH BOSS X–174637–X |
|---|---|---|---|
| DIP TYPE | X–174642–X | 3.95 | 4.4 (巾W) x 5.1 (高さH) |
| | | 5.95 | 4.4 (巾W) x 7.0 (高さH) |
| SMT TYPE | ボス無 WITHOUT BOSS X–174644–X / ボス付 WITH BOSS X–174820–X | 3.95 | 4.4 (巾W) x 5.1 (高さH) |
| | | 5.95 | 4.4 (巾W) x 7.1 (高さH) |

TABLE 1 SMT TYPEは、巾及び高さ寸法に
SMT TYPE INCLUDE DIMENSIONS
半田付タイン部寸法を含みます。
OF SOLDER DIP TINE.

△2 基板位置決め用ボス切断跡。
CUT MARK OF POSITIONER BOSS.
△3 OBSOLETE PARTS: OBSOLETE CIS STREAMLINING PER D.RENAUD/D.SINISI
△4 OBSOLETE PARTS

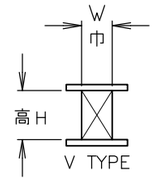


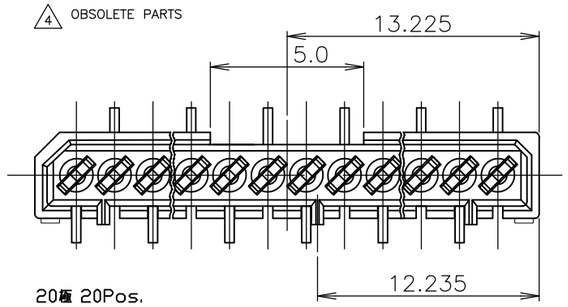


20極 20Pos.
(SCALE 5–1)

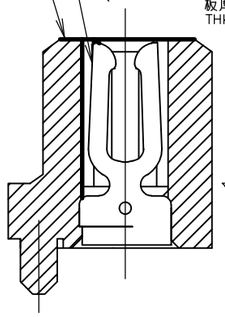

REC HEADER HOUSING
リセ・ヘッダー・ハウジング
PPS
( UL94V–0 )

REC CONTACT
リセ・コンタクト
ニッケル下地錫めっき仕上げ燐青銅
POST TIN PL.
Ni UNDER PL. ALL OVER Phos–Broz
板厚: 0.3t
THK: 0.3t

SECT "A"–"A"

ボス形状 'B'
BOSS FORM 'B'

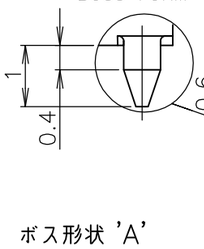


ボス形状 'A'
BOSS FORM 'A'

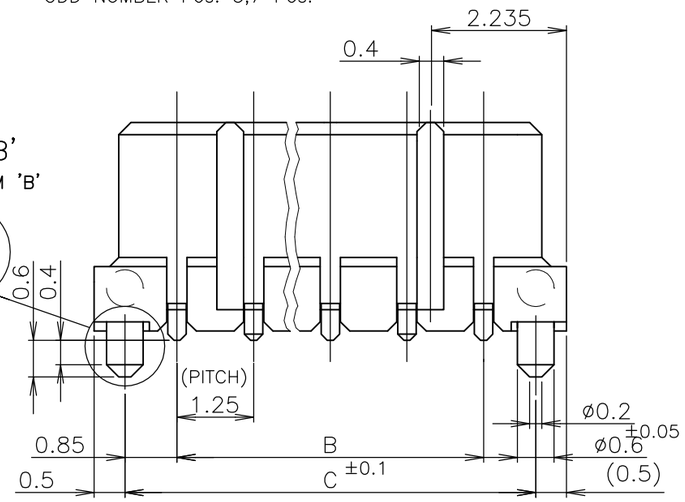


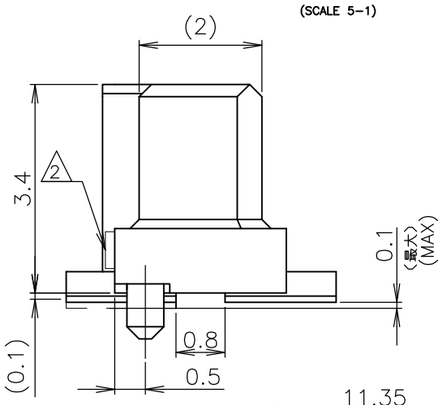


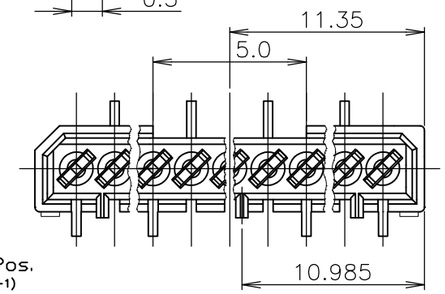


17極 17Pos.
(SCALE 5–1)

| | | | | | | |
|---|---|---|---|---|---|---|
| ↑ | 25.45 | 23.75 | 26.45 | 20 | △3 5– | –0 |
| 'A' | 21.70 | 20.00 | 22.70 | 17 | △3 4– | –7 |
| 'B' | 12.95 | 11.25 | 13.95 | 10 | 4– | –0 |
| ↑ | 10.45 | 8.75 | 11.45 | 8 | 3– | –8 |
| 'A' | 9.20 | 7.50 | 10.20 | 7 | △4 3– | –7 |
| ↑ | 7.95 | 6.25 | 8.95 | 6 | △3 3– | –6 |
| ↑ | 6.70 | 5.00 | 7.70 | 5 | △4 3– | –5 |
| 'B' | 5.45 | 3.75 | 6.45 | 4 | 3–174637–4 | |
| ボス形状 BOSS FORM | C | B | A | 極数 Pos. | 型番 P/N | |

鉛フリー
LEAD FREE

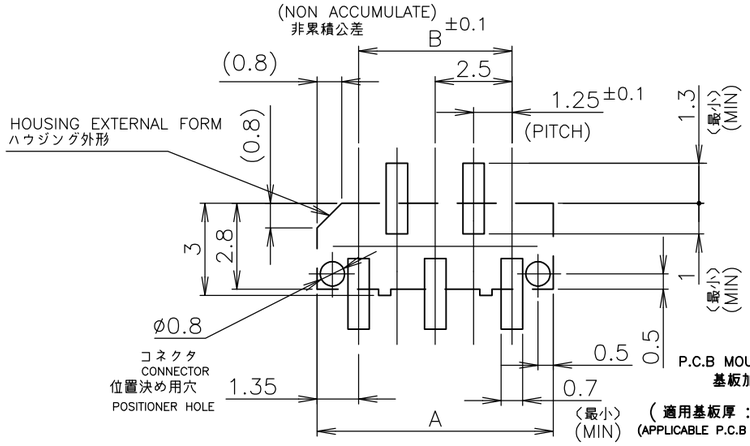


P.C.B MOUNTING LAYUOUT
基板加工寸法
( 適用基板厚 :0.6mm 最小 )
(APPLICABLE P.C.B THK : 0.6mm MIN)

THIS DRAWING IS A CONTROLLED DOCUMENT.

DIMENSIONS: mm

TOLERANCES UNLESS OTHERWISE SPECIFIED:
0 PLC ±
1 PLC ±
2 PLC ±
3 PLC ±
4 PLC ±
ANGLES ±3°
1桁以下 : ±0.2
10桁超え 3桁以下 : ±0.25
3桁超え 10桁以下 : ±0.3
角度 : ±3°

MATERIAL: AS SHOWN 図中参照
FINISH: AS SHOWN 図中参照

| | | |
|---|---|---|
| DWN | S.KANEKI | 13MAY91 |
| CHK | J.TANIGAWA | 13MAY91 |
| APVD | S.KUBOUCHI | 24DEC98 |
| PRODUCT SPEC | | |
| APPLICATION SPEC | | |
| WEIGHT | | |

CUSTOMER DRAWING

TE Connectivity

NAME
1.25 F–P CONNECTOR (B–TO–B)
SINGLE ROW REC HDR ASS'Y (V) SMT TYPE
WITH BOSS

| SIZE | CAGE CODE | DRAWING NO | RESTRICTED TO |
|---|---|---|---|
| A3 | 00779 | C–174637 | — |

| SCALE | SHEET | REV |
|---|---|---|
| 10:1 | 1 OF 1 | M |