Kingbright

Optoelectronic Components

SMD LED

RGB SMD LED 4
Top-Emitting Chip SMD LED 7
Right Angle SMD LED 14
Multi-Color SMD LED 17
Reverse Mount SMD LED 21
Top-Emitting PLCC SMD LED 21
Subminiature SMD LED 22
SOT-23 SMD LED 23
Ambient Light Sensor 24
Color Sensor 24

■ Quality ■ Efficiency ■ Service ■ Innovation

2016-2018

RGB SMD LED

Part Number	Material	λD (nm)	Lens Type	Iv (mcd) @5mA Min.	Iv (mcd) @5mA Typ.	Viewing Angle 2θ1/2	Dimensions
KPGF-0606GBRC-120	InGaN	527	water clear	30	90	140°	0.65mm x 0.65mm x 0.2mm 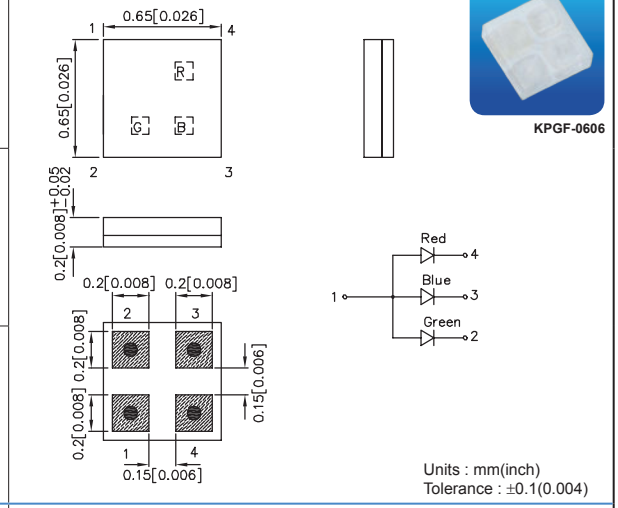
	InGaN	467		5	20	140°	
	AlGaInP	624		10	30	140°	
KPGF-1011GBRC-120	InGaN	527	water clear	50	80	150°	1.0mm x 1.0mm x 0.2mm 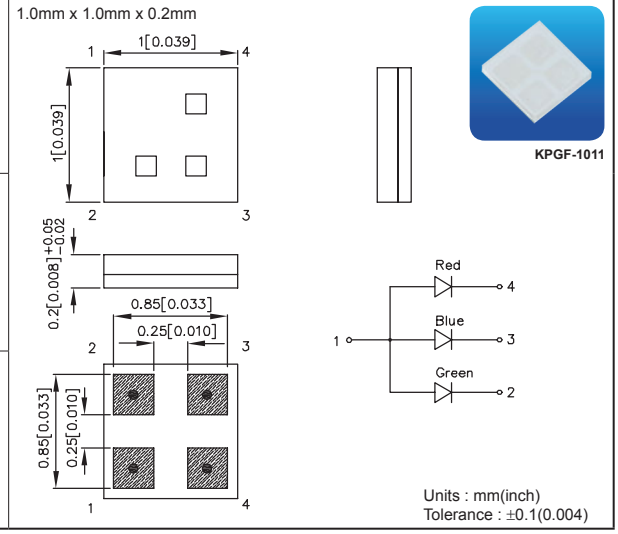
	InGaN	467		10	23	150°	
	AlGaInP	624		15	30	150°	

Part Number	Material	λD (nm)	Lens Type	Iv (mcd) @20mA Min.	Iv (mcd) @20mA Typ.	Viewing Angle 2θ1/2	Dimensions
KPTF-1616RGBC-11	AlGaInP	621	water clear	55	110	130°	1.6mm x 1.6mm x 0.7mm 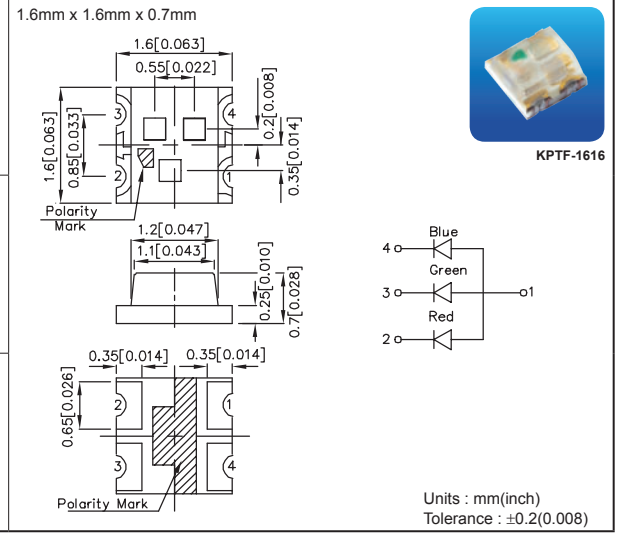
	InGaN	525		120	280	130°	
	InGaN	465		40	70	130°	

NOTES:
1. KP series custom-made is available upon request.
2. Luminous intensity value is traceable to CIE127-2007 standards.

RGB SMD LED

Part Number	Material	λD (nm)	Lens Type	Iv (mcd) @20mA Min.	Iv (mcd) @20mA Typ.	Viewing Angle 2θ1/2	Dimensions
KPFA-2507BRGC-11	InGaN	465	water clear	40	65	130°	2.5mm x 1.0mm x 0.7mm 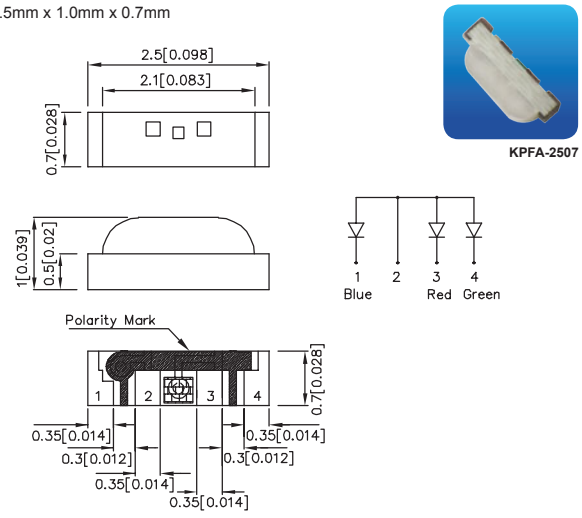 KPFA-2507 Units : mm(inch) Tolerance : ±0.15(0.006)
	AlGaInP	621		80	110	130°	
	InGaN	525		200	400	130°	
KPFA-3010RGBC-11	AlGaInP	621	water clear	80	140	150°	3.0mm x 1.5mm x 1.0mm 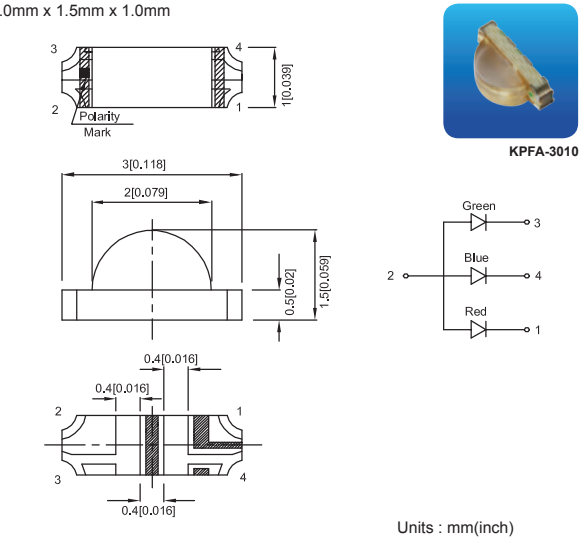 KPFA-3010 Units : mm(inch) Tolerance : ±0.2(0.008)
	InGaN	525		300	500	150°	
	InGaN	465		40	70	150°	
KPFA-3011BZ1RGZ1C-132/F	InGaN	470	water clear	55	110	150°	3.0mm x 1.5mm x 1.0mm 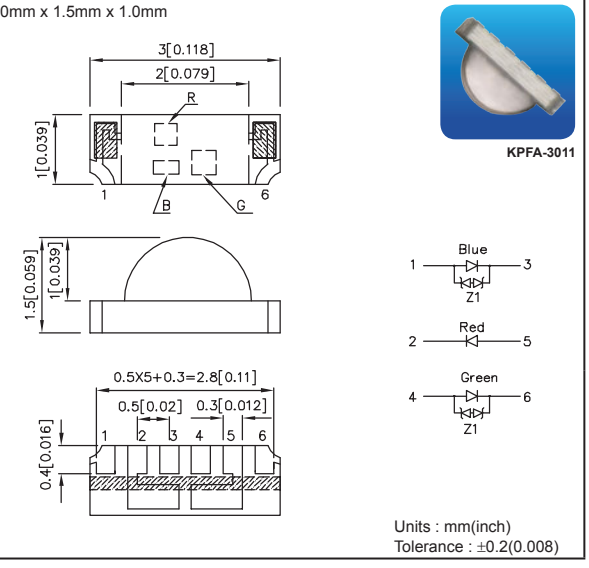 KPFA-3011 Units : mm(inch) Tolerance : ±0.2(0.008)
	AlGaInP	624		400	660	150°	
	InGaN	525		500	780	150°	

NOTES:
1. KP series custom-made is available upon request.
2. Luminous intensity value is traceable to CIE127-2007 standards.

RGB SMD LED

Part Number	Material	λD (nm)	Lens Type	Iv (mcd) @20mA Min.	Iv (mcd) @20mA Typ.	Viewing Angle 2θ1/2	Dimensions
KAA-3528RGBS-K11-C8-CC	AlGaInP	625	water clear	400	500	120°	3.5mm x 2.8mm x 1.9mm
	InGaN	525		1000	1600	120°	
	InGaN	470		200	330	120°	
KAAF-3529BGRS-132	InGaN	470	water clear	200	300	130°	3.5mm x 2.8mm x 1.8mm
	InGaN	525		1000	1600	130°	
	AlGaInP	624		700	950	130°	

KAA-3528

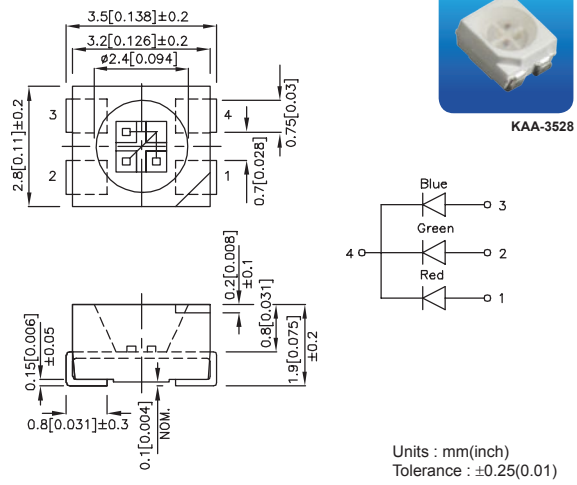

KAAF-3529

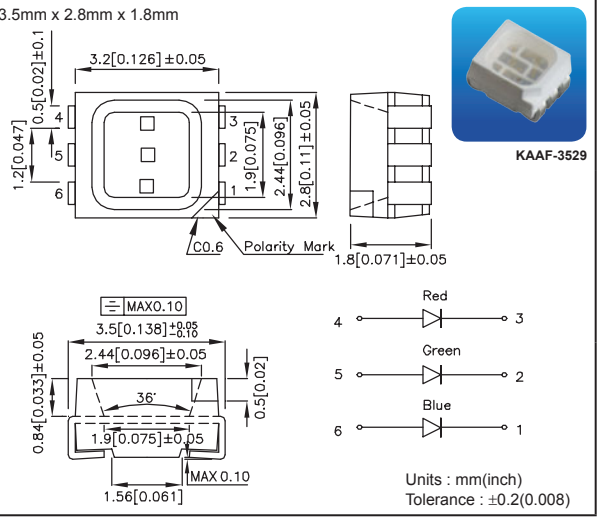

Part Number	Material	λD (nm)	Lens Type	Iv (mcd) @30mA *50mA Min.	Iv (mcd) @30mA *50mA Typ.	Viewing Angle 2θ1/2	Dimensions
KAAF-5050RGBS-13	AlGaInP	625	water clear	*1000	*1400	120°	5.0mm x 5.0mm x 1.5mm
	InGaN	525		1000	1400	120°	
	InGaN	470		300	420	120°	

KAAF-5050

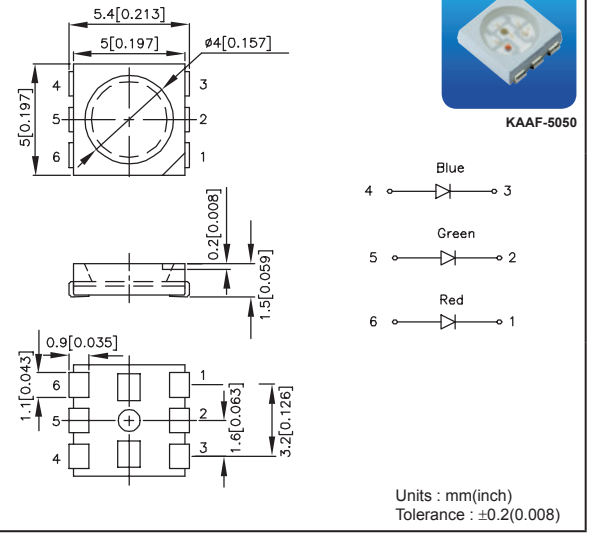

NOTE:
1. Luminous intensity value is traceable to CIE127-2007 standards.

TOP-EMITTING CHIP SMD LED

Part Number	Material	λD (nm)	Lens Type	Iv (mcd) @20mA*10mA**5mA		Viewing Angle	Dimensions
				Min.	Typ.	2θ1/2	
KPG-0603SURC-TT	AlGaInP	631	water clear	*10	*35	140°	0.65mm x 0.35mm x 0.2mm 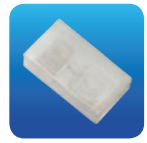 KPG-0603 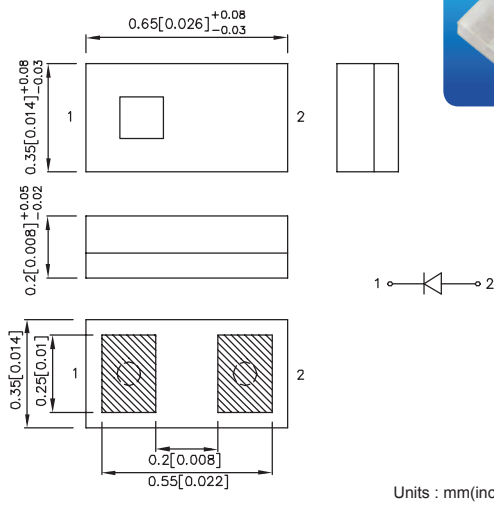 Units : mm(inch) Tolerance : ±0.1(0.004)
KPG-0603SEC-E-TT	AlGaInP	624	water clear	*15	*40	140°	
KPG-0603SEC-TT	AlGaInP	605	water clear	*20	*50	140°	
KPG-0603SYC-TT	AlGaInP	589	water clear	*10	*30	140°	
KPG-0603CGC-TT	AlGaInP	571	water clear	*6	*15	140°	
KPG-0603VGC-TT-5MAV	InGaN	527	water clear	**30	**80	140°	
KPG-0603PBC-TT-5MAV	InGaN	467	water clear	**15	**25	140°	
KPG-1005SURC-TT	AlGaInP	631	water clear	20	65	120°	1.0mm x 0.5mm x 0.2mm 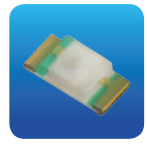 KPG-1005 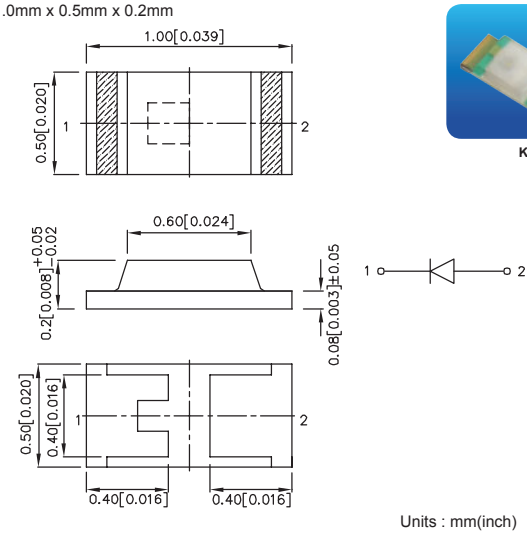 Units : mm(inch) Tolerance : ±0.1(0.004)
KPG-1005SEC-E-TT	AlGaInP	624	water clear	20	75	120°	
KPG-1005SEC-TT	AlGaInP	605	water clear	40	90	120°	
KPG-1005SYC-TT	AlGaInP	589	water clear	55	100	120°	
KPG-1005CGC-TT	AlGaInP	571	water clear	12	35	120°	
KPG-1005VGC-TT-5MAV	InGaN	527	water clear	**30	**70	140°	
KPG-1005PBC-TT-5MAV	InGaN	467	water clear	**20	**28	140°	
KPHHS-1005SURCK	AlGaInP	630	water clear	40	70	120°	1.0mm x 0.5mm x 0.5mm (0402) 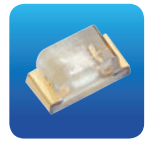 KPHHS-1005 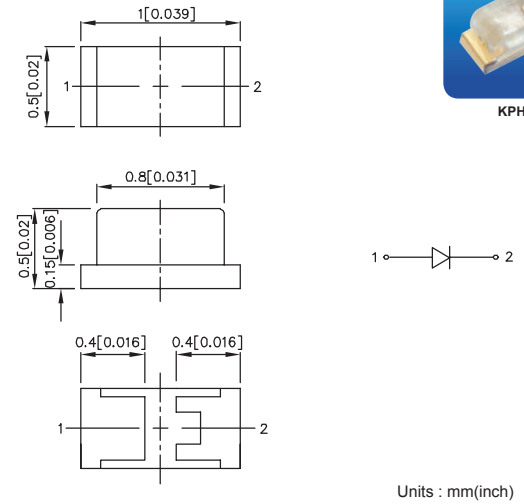 Units : mm(inch) Tolerance : ±0.1(0.004)
KPHHS-1005SECK	AlGaInP	601	water clear	80	150	120°	
KPHHS-1005SYCK	AlGaInP	590	water clear	80	150	120°	
KPHHS-1005CGCK	AlGaInP	570	water clear	20	50	120°	
KPHHS-1005ZGC-V	InGaN	525	water clear	200	450	140°	
KPHHS-1005QBC-D-V	InGaN	465	water clear	40	60	140°	

NOTES:
1. KP series custom-made is available upon request.
2. Luminous intensity value is traceable to CIE127-2007 standards.

TOP-EMITTING CHIP SMD LED

Part Number	Material	λD (nm)	Lens Type	Iv (mcd) @20mA*5mA Min.	Iv (mcd) @20mA*5mA Typ.	Viewing Angle 2θ1/2	Dimensions
KPG1-1608SURC-TT	AlGaInP	631	water clear	20	65	120°	1.6mm x 0.8mm x 0.2mm KPG1-1608 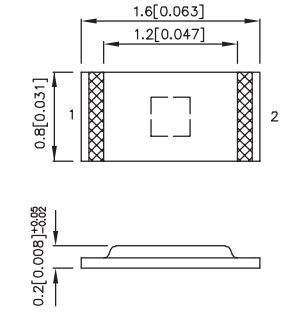 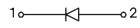 Units : mm(inch) Tolerance : ±0.1(0.004)
KPG1-1608SEC-E-TT	AlGaInP	624	water clear	20	75	120°	
KPG1-1608SEC-TT	AlGaInP	605	water clear	40	90	120°	
KPG1-1608SYC-TT	AlGaInP	589	water clear	55	100	120°	
KPG1-1608CGC-TT	AlGaInP	571	water clear	12	35	120°	
KPG1-1608VGC-TT-5MAV	InGaN	527	water clear	*30	*70	120°	
KPG1-1608PBC-TT-5MAV	InGaN	467	water clear	*8	*20	120°	
KPG-1608SURKC-T	AlGaInP	630	water clear	55	110	120°	1.6mm x 0.8mm x 0.25mm (0603) 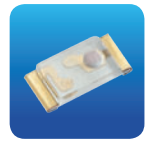 KPG-1608 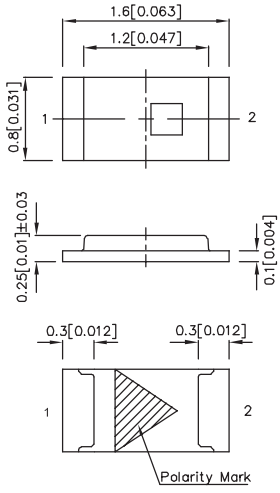 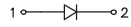 Units : mm(inch) Tolerance : ±0.1(0.004)
KPG-1608SEKC-T	AlGaInP	601	water clear	55	100	120°	
KPG-1608SYKC-T	AlGaInP	590	water clear	55	120	120°	
KPG-1608CGKC-T	AlGaInP	570	water clear	20	50	120°	
KPG-1608ZGC	InGaN	525	water clear	300	450	130°	
KPG-1608QBC-D	InGaN	465	water clear	40	100	130°	
KPG-1608VBC-D	InGaN	470	water clear	120	200	130°	
KPHM-1608EC-T	GaAsP/GaP	617	water clear	3	8	150°	1.6mm x 0.8mm x 0.4mm KPHM-1608 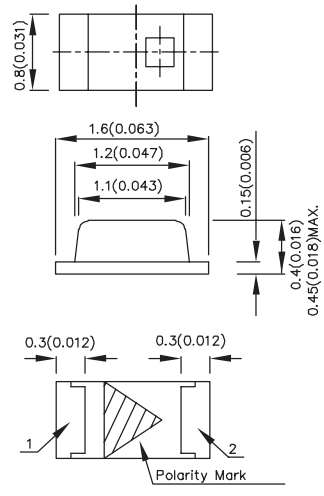 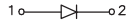 Units : mm(inch) Tolerance : ±0.1(0.004)
KPHM-1608SURCK	AlGaInP	630	water clear	40	80	120°	
KPHM-1608SECK	AlGaInP	601	water clear	80	180	120°	
KPHM-1608YC-T	GaAsP/GaP	588	water clear	5	8	150°	
KPHM-1608SYCK	AlGaInP	590	water clear	80	150	120°	
KPHM-1608SGC-T	GaP	568	water clear	5	12	150°	
KPHM-1608CGCK	AlGaInP	570	water clear	20	50	120°	
KPHM-1608QBC-D	InGaN	465	water clear	40	100	130°	
KPHM-1608VBC-D	InGaN	470	water clear	120	180	130°	

NOTES:
1. KP series custom-made is available upon request.
2. Luminous intensity value is traceable to CIE127-2007 standards.

TOP-EMITTING CHIP SMD LED

Part Number	Material	λD (nm)	Lens Type	Iv (mcd) @20mA Min.	Iv (mcd) @20mA Typ.	Viewing Angle 2θ1/2	Dimensions
KPH-1608SURCK	AlGaInP	630	water clear	40	80	120°	1.6mm x 0.8mm x 0.65mm (0603) 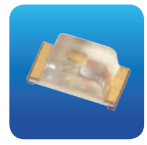 KPH-1608 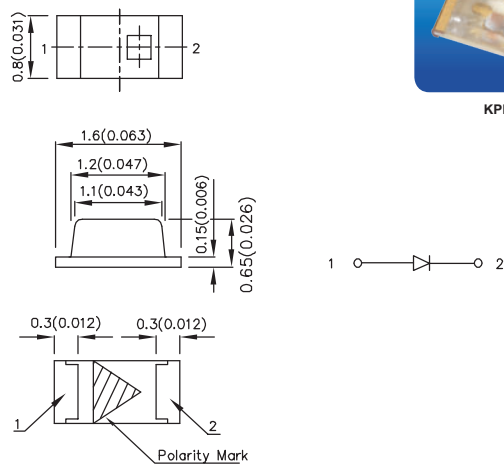 Units : mm(inch) Tolerance : ±0.1(0.004)
KPH-1608SECK	AlGaInP	601	water clear	80	180	120°	
KPH-1608YC	GaAsP/GaP	588	water clear	3	8	150°	
KPH-1608SYCK	AlGaInP	590	water clear	80	150	120°	
KPH-1608SGC	GaP	568	water clear	5	12	150°	
KPH-1608CGCK	AlGaInP	570	water clear	20	50	120°	
KPH-1608QBC-D	InGaN	465	water clear	40	100	130°	
KPHD-1608SURCK	AlGaInP	630	water clear	40	170	120°	1.6mm x 0.8mm x 0.65mm 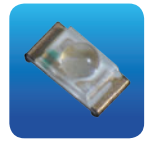 KPHD-1608 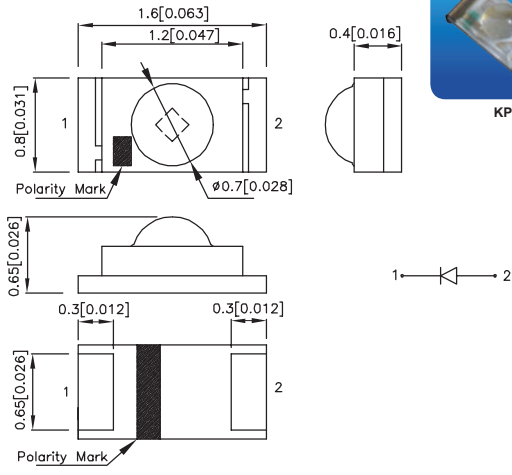 Units : mm(inch) Tolerance : ±0.15(0.006)
KPHD-1608SECK-J3-PRV	AlGaInP	625	water clear	300	600	120°	
KPHD-1608SECK-J4-PRV	AlGaInP	605	water clear	400	820	120°	
KPHD-1608SECK	AlGaInP	601	water clear	80	210	120°	
KPHD-1608SYCK	AlGaInP	590	water clear	80	210	120°	
KPHD-1608SYCK-J3-PRV	AlGaInP	590	water clear	300	600	120°	
KPHD-1608CGCK	AlGaInP	570	water clear	20	80	120°	
KPHD-1608ZGCK	InGaN	525	water clear	400	940	90°	
KPHD-1608QBC-D	InGaN	465	water clear	40	140	90°	
KPHD-1608VBC-D	InGaN	470	water clear	120	260	90°	
KPT-1608EC	GaAsP/GaP	617	water clear	3	8	150°	1.6mm x 0.8mm x 0.75mm (0603) KPT-1608 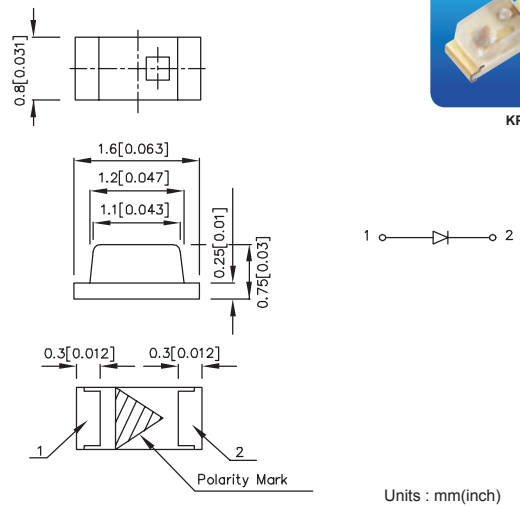 Units : mm(inch) Tolerance : ±0.1(0.004)
KPT-1608SURCK	AlGaInP	630	water clear	40	80	120°	
KPT-1608SECK	AlGaInP	601	water clear	80	180	120°	
KPT-1608YC	GaAsP/GaP	588	water clear	3	8	150°	
KPT-1608SYCK	AlGaInP	590	water clear	80	150	120°	
KPT-1608SGC	GaP	568	water clear	5	12	150°	
KPT-1608CGCK	AlGaInP	570	water clear	20	50	120°	
KPT-1608ZGC	InGaN	525	water clear	200	400	130°	
KPT-1608QBC-D	InGaN	465	water clear	40	100	130°	
KPT-1608VBC-D	InGaN	470	water clear	120	180	130°	

NOTES:
1. KP series custom-made is available upon request.
2. Luminous intensity value is traceable to CIE127-2007 standards.

TOP-EMITTING CHIP SMD LED

Part Number	Material	λD (nm)	Lens Type	Iv (mcd) @20mA		Viewing Angle	Dimensions
				Min.	Typ.	2θ1/2	
KPC-1608SEC-E	AlGaInP	621	water clear	55	100	150°	1.6mm x 0.8mm x 1.06mm 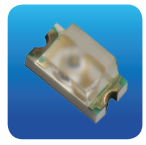 KPTD-1608 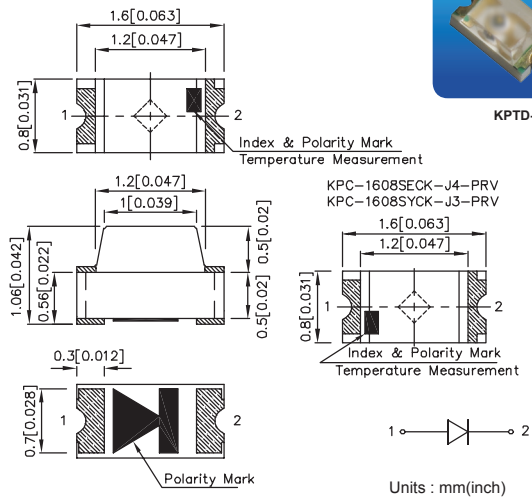
KPC-1608SECK-J4-PRV	AlGaInP	605	water clear	300	550	150°	
KPC-1608SYCK	AlGaInP	590	water clear	80	150	150°	
KPC-1608SYCK-J3-PRV	AlGaInP	590	water clear	200	320	150°	
KPC-1608FGCK	AlGaInP	568	water clear	20	50	150°	
KP-1608EC	GaAsP/GaP	617	water clear	3	8	150°	1.6mm x 0.8mm x 1.1mm (0603) 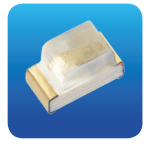 KPC-1608 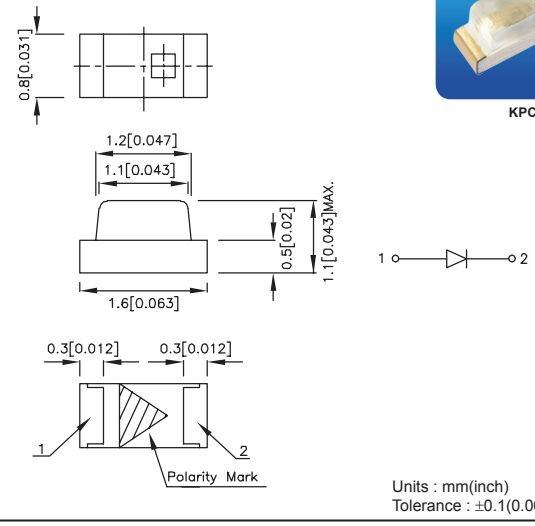
KP-1608SURCK	AlGaInP	630	water clear	40	80	120°	
KP-1608SECK	AlGaInP	601	water clear	80	180	120°	
KP-1608YC	GaAsP/GaP	588	water clear	3	8	150°	
KP-1608SYCK	AlGaInP	590	water clear	80	150	120°	
KP-1608SGC	GaP	568	water clear	5	12	150°	
KP-1608CGCK	AlGaInP	570	water clear	20	50	120°	
KP-1608ZGC	InGaN	525	water clear	200	400	130°	
KP-1608QBC-D	InGaN	465	water clear	40	100	130°	

NOTES:
1. KP series custom-made is available upon request.
2. Luminous intensity value is traceable to CIE127-2007 standards.

TOP-EMITTING CHIP SMD LED

Part Number	Material	λD (nm)	Lens Type	Iv (mcd) @20mA Min.	Iv (mcd) @20mA Typ.	Viewing Angle 2θ1/2	Dimensions
KPHCM-2012SURCK	AlGaInP	630	water clear	40	80	140°	2.0mm x 1.25mm x 0.4mm (0805)
KPHCM-2012SECK	AlGaInP	601	water clear	80	180	140°	
KPHCM-2012SYCK	AlGaInP	590	water clear	80	150	140°	
KPHCM-2012CGCK	AlGaInP	570	water clear	20	50	140°	
KPHCM-2012ZGC	InGaN	525	water clear	200	400	140°	
KPHCM-2012QBC-D	InGaN	465	water clear	40	100	140°	
KPT-2012EC	GaAsP/GaP	617	water clear	3	8	160°	2.0mm x 1.25mm x 0.75mm (0805)
KPT-2012SURCK	AlGaInP	630	water clear	40	80	140°	
KPT-2012SECK	AlGaInP	601	water clear	80	180	140°	
KPT-2012YC	GaAsP/GaP	588	water clear	3	8	160°	
KPT-2012SYCK	AlGaInP	590	water clear	80	150	140°	
KPT-2012SGC	GaP	568	water clear	5	12	160°	
KPT-2012CGCK	AlGaInP	570	water clear	20	50	140°	
KPT-2012ZGC	InGaN	525	water clear	200	400	140°	
KPT-2012QBC-D	InGaN	465	water clear	40	100	140°	
KPT-2012VBC-D	InGaN	470	water clear	120	180	140°	
KP-2012EC	GaAsP/GaP	617	water clear	3	8	160°	2.0mm x 1.25mm x 1.1mm (0805)
KP-2012SURCK	AlGaInP	630	water clear	40	80	140°	
KP-2012SECK	AlGaInP	601	water clear	80	180	140°	
KP-2012YC	GaAsP/GaP	588	water clear	3	8	160°	
KP-2012SYCK	AlGaInP	590	water clear	80	150	140°	
KP-2012SGC	GaP	568	water clear	5	12	160°	
KP-2012CGCK	AlGaInP	570	water clear	20	50	140°	
KP-2012ZGC	InGaN	525	water clear	200	400	140°	
KP-2012QBC-D	InGaN	465	water clear	40	100	140°	

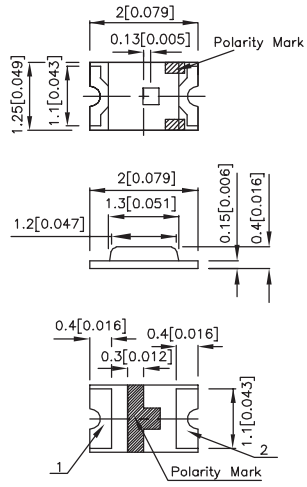

KPHCM-2012

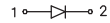

Units : mm(inch)
Tolerance : ±0.1(0.004)

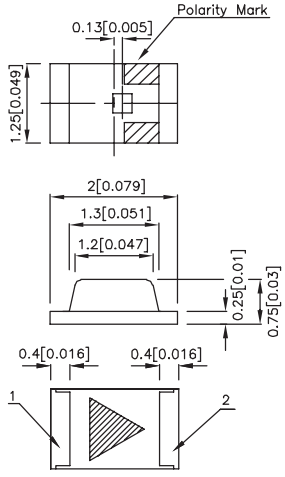

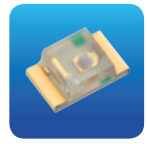
KPT-2012

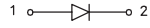

Units : mm(inch)
Tolerance : ±0.1(0.004)

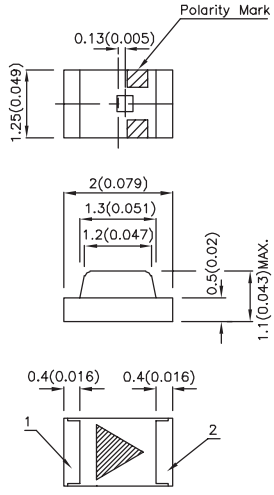

KP-2012

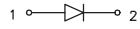

Units : mm(inch)
Tolerance : ±0.1(0.004)

NOTES:
1. KP series custom-made is available upon request.
2. Luminous intensity value is traceable to CIE127-2007 standards.

TOP-EMITTING CHIP SMD LED

Part Number	Material	λD (nm)	Lens Type	Iv (mcd) @20mA		Viewing Angle	Dimensions
				Min.	Typ.	2θ1/2	
KPL-3015EC	GaAsP/GaP	617	water clear	5	12	100°	3.0mm x 1.5mm x 1.4mm (1106)
KPL-3015SURCK	AlGaInP	630	water clear	120	180	70°	
KPL-3015SECK	AlGaInP	601	water clear	120	350	70°	
KPL-3015SYCK	AlGaInP	590	water clear	200	350	70°	
KPL-3015YC	GaAsP/GaP	588	water clear	8	14	100°	
KPL-3015SGC	GaP	568	water clear	8	18	100°	
KPL-3015CGCK	AlGaInP	570	water clear	55	120	70°	
KPL-3015ZGC	InGaN	525	water clear	500	800	50°	
KPL-3015QBC-D	InGaN	465	water clear	120	200	50°	
KPTC-3212SURCK-01	AlGaInP	630	water clear	40	80	140°	3.2mm x 1.25mm x 1.1mm
KPTC-3212SECK-01	AlGaInP	601	water clear	80	180	140°	
KPTC-3212SYCK-01	AlGaInP	590	water clear	80	180	140°	
KPTC-3212CGCK-01	AlGaInP	570	water clear	20	50	140°	
KPTC-3212QBC-D-01	InGaN	465	water clear	40	80	140°	
KPT-3216EC	GaAsP/GaP	617	water clear	3	8	160°	3.2mm x 1.6mm x 0.75mm (1206)
KPT-3216SURCK	AlGaInP	630	water clear	40	80	140°	
KPT-3216SECK	AlGaInP	601	water clear	80	180	140°	
KPT-3216YC	GaAsP/GaP	588	water clear	3	8	160°	
KPT-3216SYCK	AlGaInP	590	water clear	80	150	140°	
KPT-3216SGC	GaP	568	water clear	5	12	160°	
KPT-3216CGCK	AlGaInP	570	water clear	20	50	140°	
KPT-3216ZGC	InGaN	525	water clear	200	400	150°	
KPT-3216QBC-D	InGaN	465	water clear	40	100	150°	

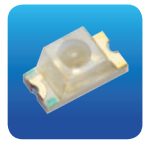
KPL-3015

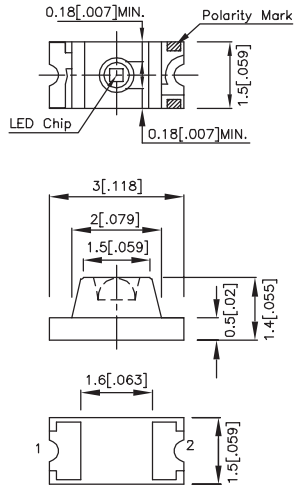

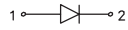

Units : mm(inch)
Tolerance : ±0.2(0.008)

KPTC-3212

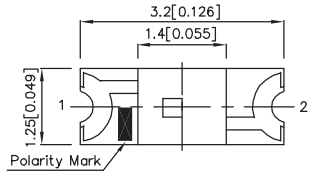

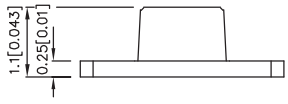

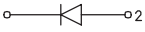

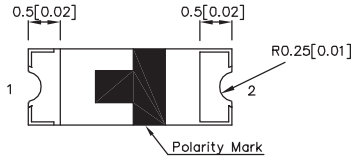

Units : mm(inch)
Tolerance : ±0.2(0.008)

KPT-3216

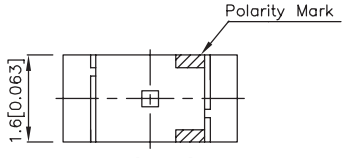

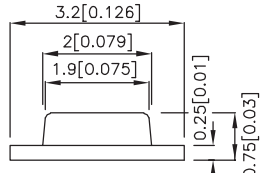

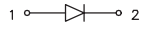

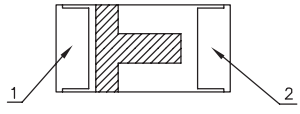

Units : mm(inch)
Tolerance : ±0.2(0.008)

NOTES:
1. KP series custom-made is available upon request.
2. Luminous intensity value is traceable to CIE127-2007 standards.

TOP-EMITTING CHIP SMD LED

Part Number	Material	λD (nm)	Lens Type	Iv (mcd) @20mA Min.	Iv (mcd) @20mA Typ.	Viewing Angle 2θ1/2	Dimensions
KP-3216EC	GaAsP/GaP	617	water clear	3	8	160°	3.2mm x 1.6mm x 1.1mm (1206)
KP-3216SURCK	AlGaInP	630	water clear	40	80	140°	
KP-3216SECK	AlGaInP	601	water clear	80	180	140°	
KP-3216YC	GaAsP/GaP	588	water clear	3	8	160°	
KP-3216SYCK	AlGaInP	590	water clear	80	150	140°	
KP-3216SGC	GaP	568	water clear	5	12	160°	
KP-3216CGCK	AlGaInP	570	water clear	20	50	140°	
KP-3216ZGC	InGaN	525	water clear	200	400	150°	
KP-3216QBC-D	InGaN	465	water clear	40	100	150°	
KPTL-3216SURCK	AlGaInP	630	water clear	120	230	80°	3.2mm x 1.6mm x 1.1mm (1206)
KPTL-3216SECK	AlGaInP	601	water clear	200	350	80°	
KPTL-3216SYCK	AlGaInP	590	water clear	200	350	80°	
KPTL-3216CGCK	AlGaInP	570	water clear	55	100	80°	
KPTL-3216ZGC	InGaN	525	water clear	700	1100	80°	
KPTL-3216QBC-D	InGaN	465	water clear	120	250	80°	
KPTD-3216SURCK	AlGaInP	630	water clear	300	800	40°	3.2mm x 1.6mm x 1.8mm (1206 Dome Lens)
KPTD-3216SECK	AlGaInP	601	water clear	500	1000	40°	
KPTD-3216SYCK	AlGaInP	590	water clear	700	800	40°	
KPTD-3216CGCK	AlGaInP	570	water clear	120	300	40°	
KPTD-3216ZGC	InGaN	525	water clear	1900	3500	30°	
KPTD-3216ZGC-G	InGaN	525	water clear	3100	4200	30°	
KPTD-3216QBC-D	InGaN	465	water clear	300	700	30°	

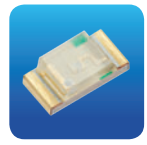
KP-3216

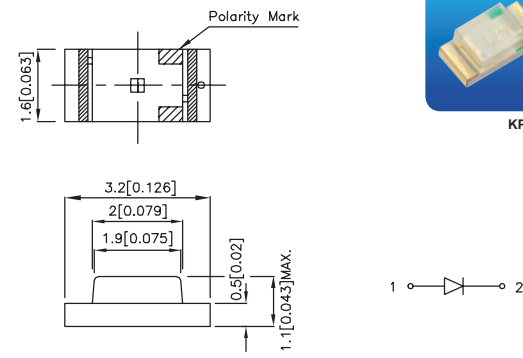

Units : mm(inch)
Tolerance : ±0.2(0.008)

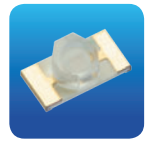
KPTL-3216

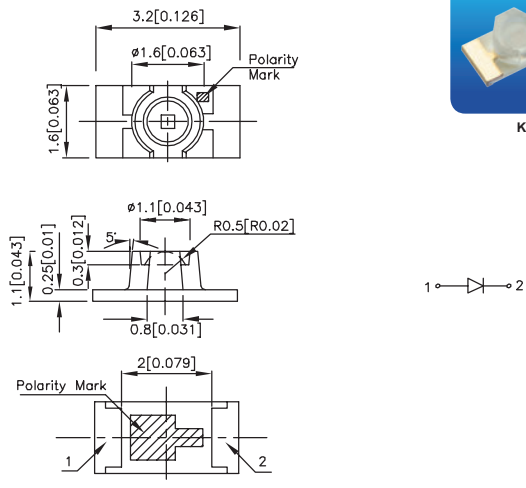

Units : mm(inch)
Tolerance : ±0.1(0.004)

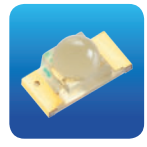
KPTD-3216

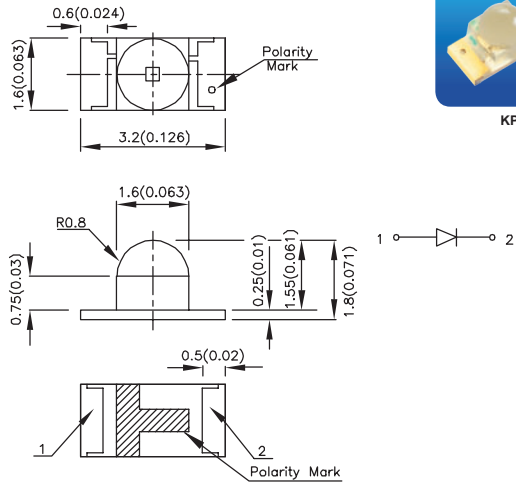

Units : mm(inch)
Tolerance : ±0.2(0.008)

NOTES:
1. KP series custom-made is available upon request.
2. Luminous intensity value is traceable to CIE127-2007 standards.

TOP-EMITTING CHIP SMD LED

Part Number	Material	λD (nm)	Lens Type	Iv (mcd) @20mA Min.	Iv (mcd) @20mA Typ.	Viewing Angle 2θ1/2	Dimensions
KPD-3224SURCK	AlGaInP	630	water clear	700	1500	20°	3.2mm x 2.4mm x 2.4mm (Dome Lens)
KPD-3224SECK	AlGaInP	601	water clear	1000	1600	20°	
KPD-3224SYCK	AlGaInP	590	water clear	1000	1300	20°	
KPD-3224CGCK	AlGaInP	570	water clear	400	600	20°	
KPD-3224ZGC	InGaN	525	water clear	3100	6000	20°	
KPD-3224QBC-D	InGaN	465	water clear	500	900	20°	
KPED-3528SURCK	AlGaInP	630	water clear	120	250	70°	3.5mm x 2.8mm x 3.2mm (Dome Lens)
KPED-3528SECK	AlGaInP	601	water clear	400	700	70°	
KPED-3528SYCK	AlGaInP	590	water clear	300	500	70°	
KPED-3528CGCK	AlGaInP	570	water clear	80	200	70°	

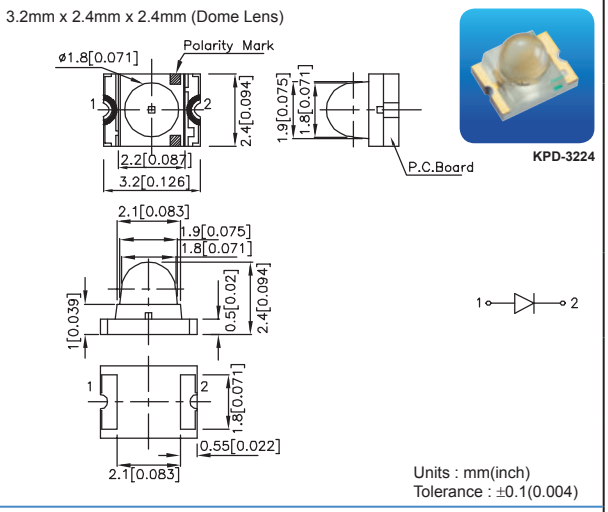

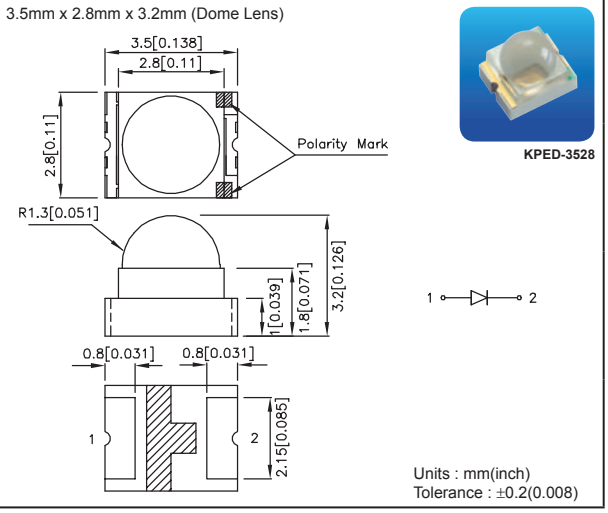

RIGHT ANGLE SMD LED

Part Number	Material	λD (nm)	Lens Type	Iv (mcd) @20mA Min.	Iv (mcd) @20mA Typ.	Viewing Angle 2θ1/2	Dimensions
KPGA-1602SURC-KA	AlGaInP	631	water clear	20	70	150°	1.6mm x 0.9mm x 0.2mm (Right Angle)
KPGA-1602SEC-E-KA	AlGaInP	624	water clear	55	120	150°	
KPGA-1602SEC-KA	AlGaInP	605	water clear	20	70	150°	
KPGA-1602SYC-KA	AlGaInP	589	water clear	40	75	150°	
KPGA-1602CGC-KA	AlGaInP	571	water clear	12	30	150°	
KPGA-1602QBC-KA	InGaN	463	water clear	20	60	150°	

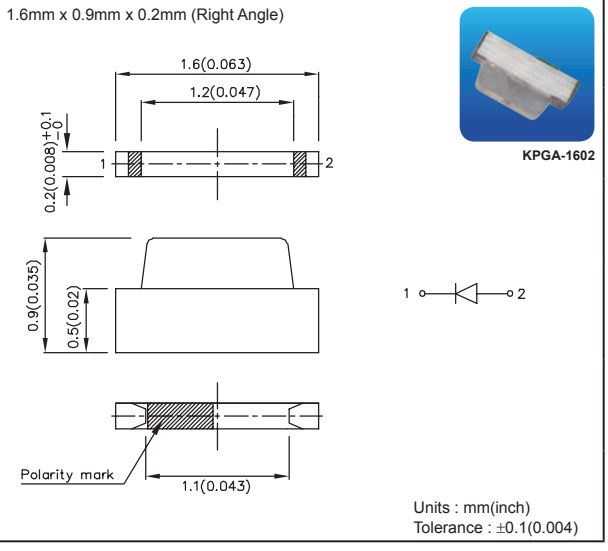

NOTES:
1. KP series custom-made is available upon request.
2. Luminous intensity value is traceable to CIE127-2007 standards.

RIGHT ANGLE SMD LED

Part Number	Material	λD (nm)	Lens Type	Iv (mcd) @20mA Min.	Iv (mcd) @20mA Typ.	Viewing Angle 2θ1/2	Dimensions
KPA-1606SURCK	AlGaInP	630	water clear	40	80	110°	1.6mm x 1.2mm x 0.6mm (0602 Right Angle) 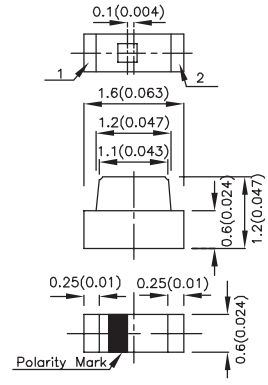 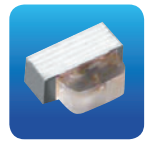 KPA-1606 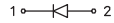 Units : mm(inch) Tolerance : ±0.1(0.004)
KPA-1606SECK	AlGaInP	601	water clear	80	180	110°	
KPA-1606SYCK	AlGaInP	590	water clear	80	150	110°	
KPA-1606CGCK	AlGaInP	570	water clear	20	50	110°	
KPA-1606ZGC	InGaN	525	water clear	200	400	110°	
KPA-1606QBC-D	InGaN	465	water clear	40	80	110°	
KPA-1606QBC-G	InGaN	465	water clear	80	150	110°	
KPA-1606VBC-D	InGaN	470	water clear	120	200	110°	
KPA-2107SURCK	AlGaInP	630	water clear	40	80	140°	2.1mm x 1.0mm x 0.6mm (Right Angle) 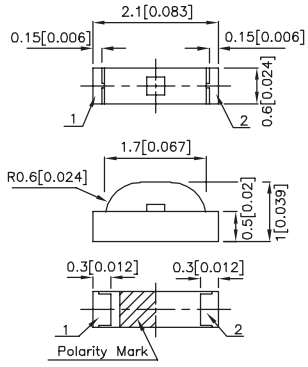 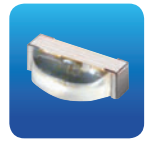 KPA-2107 Units : mm(inch) Tolerance : ±0.1(0.004)
KPA-2107SECK	AlGaInP	601	water clear	80	180	140°	
KPA-2107SYCK	AlGaInP	590	water clear	80	150	140°	
KPA-2107CGCK	AlGaInP	570	water clear	20	50	140°	
KPA-2107ZGCK	InGaN	525	water clear	200	300	170°	
KPA-2107ZGC-G	InGaN	525	water clear	400	650	170°	
KPA-2107QBC-D	InGaN	465	water clear	40	80	170°	
KPA-2107VBC-D	InGaN	470	water clear	120	200	170°	
KPA-3010EC	GaAsP/GaP	617	water clear	3	6	120°	3.0mm x 2.0mm x 1.0mm (1104 Right Angle) 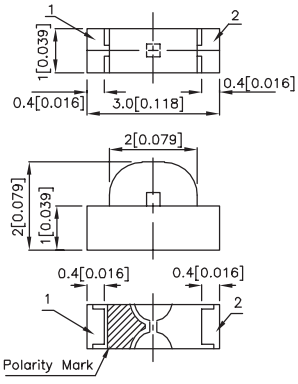 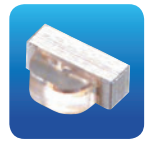 KPA-3010 Units : mm(inch) Tolerance : ±0.15(0.006)
KPA-3010SURCK	AlGaInP	630	water clear	40	80	120°	
KPA-3010SECK	AlGaInP	601	water clear	80	180	120°	
KPA-3010YC	GaAsP/GaP	588	water clear	3	6	120°	
KPA-3010SYCK	AlGaInP	590	water clear	80	150	120°	
KPA-3010SGC	GaP	568	water clear	5	12	120°	
KPA-3010CGCK	AlGaInP	570	water clear	20	50	120°	
KPA-3010ZGC	InGaN	525	water clear	200	400	120°	
KPA-3010QBC-D	InGaN	465	water clear	40	80	120°	
KPPA-3010SURCK	AlGaInP	630	water clear	200	300	30°	3.0mm x 2.5mm x 1.0mm (Right Angle) 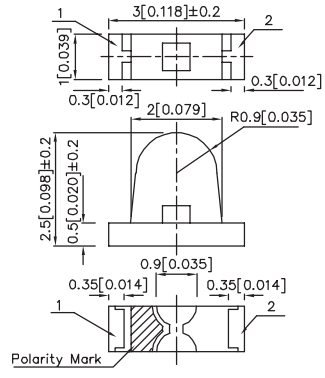 KPPA-3010 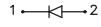 Units : mm(inch) Tolerance : ±0.15(0.006)
KPPA-3010SYCK	AlGaInP	590	water clear	300	450	30°	
KPPA-3010CGCK	AlGaInP	570	water clear	80	150	30°	

NOTES:
1. KP series custom-made is available upon request.
2. Luminous intensity value is traceable to CIE127-2007 standards.

RIGHT ANGLE SMD LED

Part Number	Material	λD (nm)	Lens Type	Iv (mcd) @20mA		Viewing Angle	Dimensions
				Min.	Typ.	2θ1/2	
KPA-3210SYCK	AlGaInP	590	water clear	80	150	120°	3.2mm x 1.5mm x 1.0mm (1304 Right Angle)
KPA-3210ZGC	InGaN	525	water clear	200	400	150°	
KPA-3210VBC-D	InGaN	470	water clear	120	200	150°	
KA-2810ASURSK	AlGaInP	630	water clear	40	100	110°	2.8mm x 1.2mm x 0.8mm (Right Angle)
KA-2810ASYSK	AlGaInP	590	water clear	120	200	110°	
KA-2810ACGSK	AlGaInP	570	water clear	20	60	110°	
KA-2810AZGS	InGaN	525	water clear	500	850	110°	
KA-2810AZGS-G	InGaN	525	water clear	1000	1400	110°	
KA-2810AQBS-D	InGaN	465	water clear	80	150	110°	
KA-2810AVBS-D	InGaN	470	water clear	200	350	110°	
KA-4008SURSK	AlGaInP	630	water clear	55	90	120°	4.0mm x 0.8mm (Right Angle)
KA-4008ZGS	InGaN	525	water clear	500	800	120°	
KA-4008VBS-D	InGaN	470	water clear	300	450	120°	

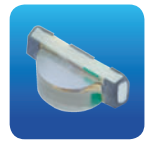
KPA-3210

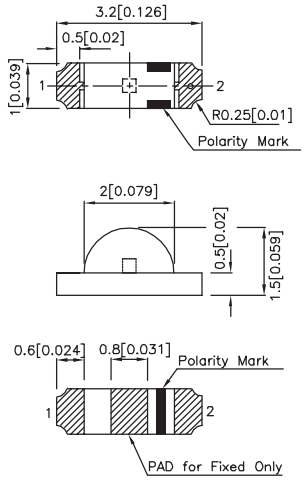

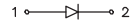

Units : mm(inch)
Tolerance : ±0.1(0.004)

KA-2810A

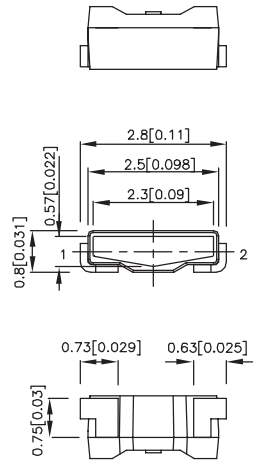

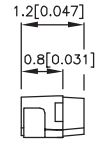

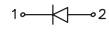

Units : mm(inch)
Tolerance : ±0.1(0.004)

KA-4008

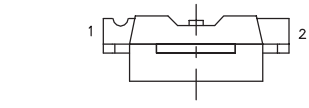

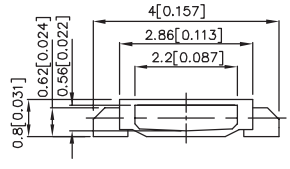

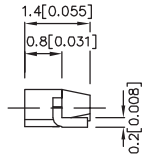

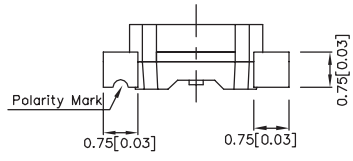

Units : mm(inch)
Tolerance : ±0.1(0.004)

NOTES:
1. KP series custom-made is available upon request.
2. Luminous intensity value is traceable to CIE127-2007 standards.

RIGHT ANGLE SMD LED

Part Number	Material	λD (nm)	Lens Type	Iv (mcd) @20mA Min.	Iv (mcd) @20mA Typ.	Viewing Angle 2θ1/2	Dimensions
KA-4040SURCKT	AlGaInP	630	water clear	80	150	120°	4.0mm x 4.0mm (Right Angle)
KA-4040SECKT	AlGaInP	601	water clear	80	220	120°	
KA-4040SYCKT	AlGaInP	590	water clear	120	250	120°	
KA-4040CGCKT	AlGaInP	570	water clear	40	90	120°	
KA-4040ZGCT	InGaN	525	water clear	500	850	120°	
KA-4040QBS-D	InGaN	465	water clear	80	220	120°	

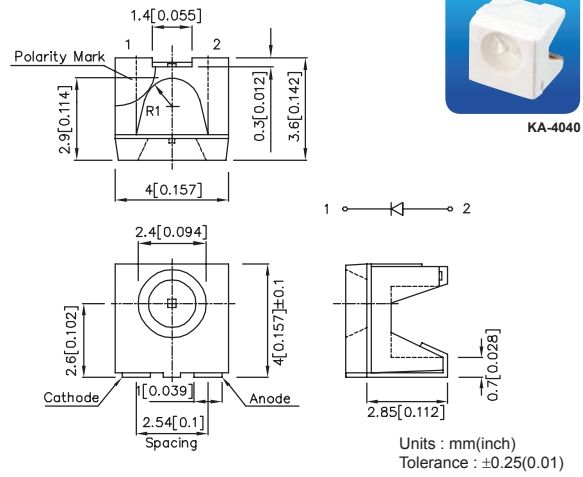

MULTI-COLOR SMD LED

Part Number	Material	λD (nm)	Lens Type	Iv (mcd) @20mA Min.	Iv (mcd) @20mA Typ.	Viewing Angle 2θ1/2	Dimensions
KPHB-1608CGKSYKC-GX	AlGaInP	570	water clear	20	50	130°	1.6mm x 0.8mm x 0.5mm (Bi-Color)
	AlGaInP	590		80	150		
KPHB-1608ZGSURKC-GX	InGaN	525	water clear	200	350	130°	
	AlGaInP	630		40	90		
KPHB-1608CGKSURKC-GX	AlGaInP	570	water clear	20	50	130°	
	AlGaInP	630		40	90		
KPHB-1608SGYC-GX	GaP	568	water clear	5	15	130°	
	GaAsP/GaP	588		3	5		
KPHB-1608SGEC-GX	GaP	568	water clear	5	15	130°	
	GaAsP/GaP	617		5	12		
KPHB-1608QBDCGKC-GX	InGaN	465	water clear	40	70	130°	
	AlGaInP	570		20	50		
KPHB-1608SYKSURKC-GX	AlGaInP	590	water clear	80	150	130°	
	AlGaInP	630		40	90		
KPTB-1612ESGC	GaAsP/GaP	617	water clear	3	7	150°	1.6mm x 1.25mm x 0.65mm (0605 Bi-Color)
	GaP	568		5	12		
KPTB-1612SURKCGKC	AlGaInP	630	water clear	40	80	150°	
	AlGaInP	570		20	50		
KPTB-1612SURKQBDC	AlGaInP	630	water clear	40	80	150°	
	InGaN	465		40	80		
KPTB-1612SYKCGKC	AlGaInP	590	water clear	80	120	150°	
	AlGaInP	570		20	50		

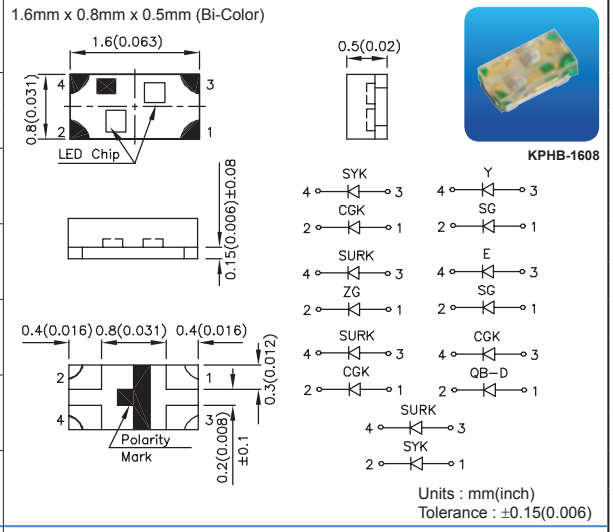

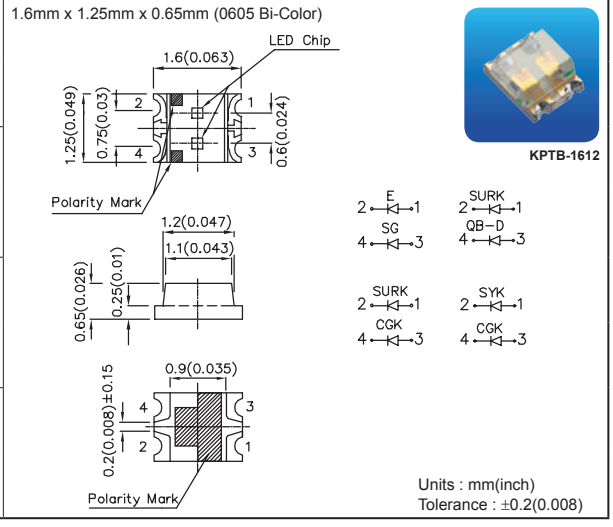

NOTES:
1. KP series custom-made is available upon request.
2. Luminous intensity value is traceable to CIE127-2007 standards.

MULTI-COLOR SMD LED

Part Number	Material	λD (nm)	Lens Type	Iv (mcd) @20mA Min.	Iv (mcd) @20mA Typ.	Viewing Angle 2θ1/2	Dimensions
KPTB-1615ESGC	GaAsP/GaP	617	water clear	3	7	150°	1.6mm x 1.5mm x 0.7mm (0606 Bi-Color)
	GaP	568		5	12		
KPTB-1615SURKCGKC	AlGaInP	630	water clear	40	80	150°	
	AlGaInP	570		20	50		
KPTB-1615SURKQBDC	AlGaInP	630	water clear	40	80	150°	
	InGaN	465		40	80		
KPTB-1615YSGC	GaAsP/GaP	588	water clear	3	8	150°	
	GaP	568		5	12		
KPTB-1615SYKCGKC	AlGaInP	590	water clear	80	120	150°	
	AlGaInP	570		20	50		
KPHBM-2012SURKCGKC	AlGaInP	630	water clear	40	80	120°	2.0mm x 1.25mm x 0.45mm (Bi-Color)
	AlGaInP	570		20	50		
KPHBM-2012CGKSEKC	AlGaInP	570	water clear	20	50	120°	
	AlGaInP	601		80	180		
KPHBM-2012CGKSYKC	AlGaInP	570	water clear	20	50	120°	
	AlGaInP	590		80	120		
KPHBM-2012QBDSURKC	InGaN	465	water clear	40	80	120°	
	AlGaInP	630		40	80		
KPHBM-2012QBDCGKC	InGaN	465	water clear	40	80	120°	
	AlGaInP	570		20	50		
KPBA-3010ESGC	GaAsP/GaP	617	water clear	3	8	140°	3.0mm x 1.0mm x 2.0mm (1104 Right Angle, Bi-Color)
	GaP	568		5	15		
KPBA-3010SURKCGKC	AlGaInP	630	water clear	40	80	140°	
	AlGaInP	570		40	70		
KPBA-3010SURKQBDC	AlGaInP	630	water clear	40	80	140°	
	InGaN	465		40	90		
KPBA-3010SEKCGKC	AlGaInP	601	water clear	80	150	140°	
	AlGaInP	570		40	70		
KPBA-3010SYKCGKC	AlGaInP	590	water clear	80	120	140°	
	AlGaInP	570		40	70		

KPTB-1615

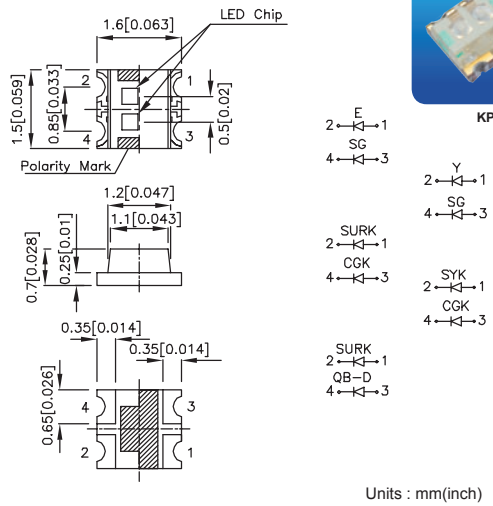

Units : mm(inch)
Tolerance : ±0.2(0.008)

KPHBM-2012

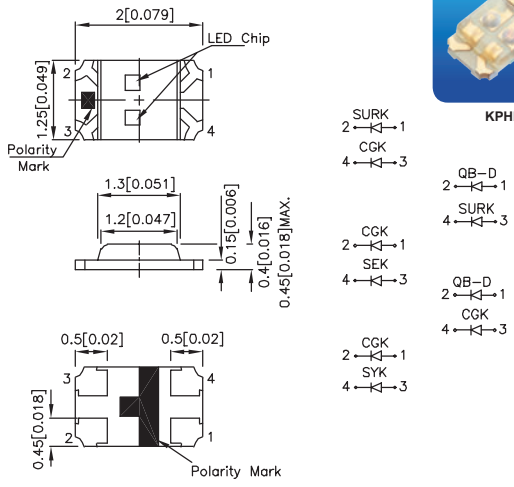

Units : mm(inch)
Tolerance : ±0.1(0.004)

KPBA-3010

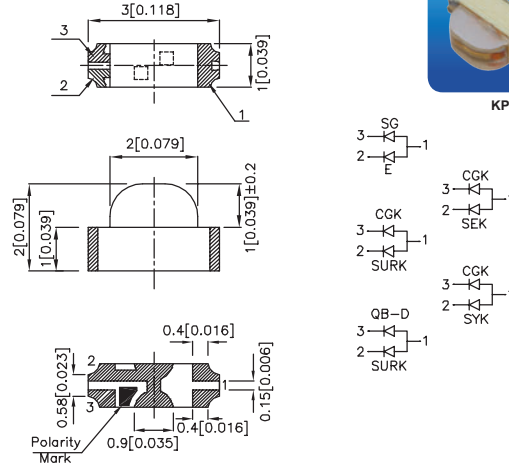

Units : mm(inch)
Tolerance : ±0.15(0.006)

NOTES:
1. KP series custom-made is available upon request.
2. Luminous intensity value is traceable to CIE127-2007 standards.

MULTI-COLOR SMD LED

Part Number	Material	λD (nm)	Lens Type	Iv (mcd) @20mA Min.	Iv (mcd) @20mA Typ.	Viewing Angle 2θ1/2	Dimensions
KM-23ESGC	GaAsP/GaP	617	water clear	3	5	160°	SOT-23 Surface Mount LED Lamp (3mm x 1.3mm) KM-23 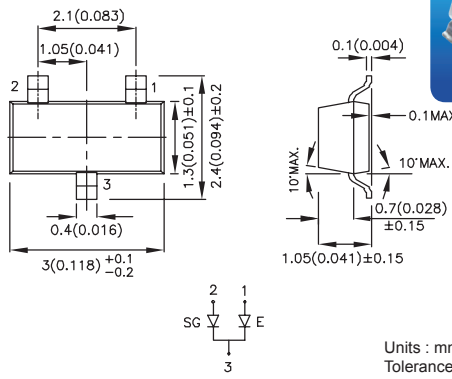 Units : mm(inch) Tolerance : ±0.25(0.01)
	GaP	568		5	10		
KPBDA-3020SURKCGKC-PF	AlGaInP	630	water clear	120	300	15°	3.0mm x 2.8mm x 2.0mm (Right Angle, Dome Lens) KPBDA-3020 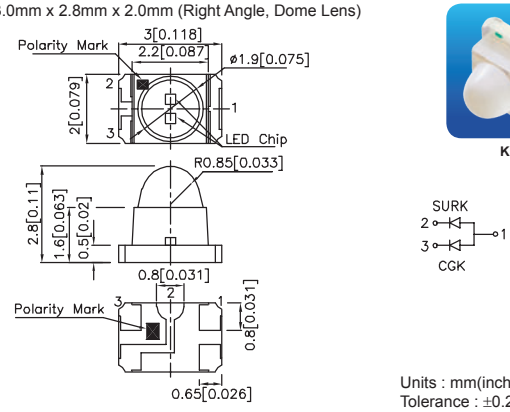 Units : mm(inch) Tolerance : ±0.2(0.008)
	AlGaInP	570		120	300		
KPB-3025ESGC	GaAsP/GaP	617	water clear	3	8	160°	3.0mm x 2.5mm x 1.1mm (1109 Bi-Color) KPB-3025 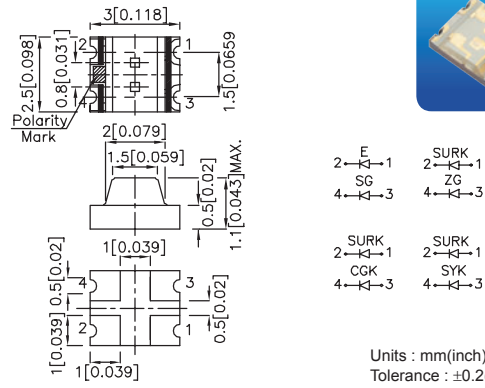 Units : mm(inch) Tolerance : ±0.2(0.008)
	GaP	568		8	15		
KPB-3025SURKCGKC	AlGaInP	630	water clear	40	70	160°	
	AlGaInP	570		20	60		
KPB-3025SURKZGC	AlGaInP	630	water clear	40	70	160°	
	InGaN	525		200	350		
KPB-3025SURKSYKC	AlGaInP	630	water clear	40	70	160°	
	AlGaInP	590		80	120		
KPBL-3025ESGC	GaAsP/GaP	617	water clear	8	15	70°	3.0mm x 2.5mm x 1.4mm (1109 Bi-Color) KPBL-3025 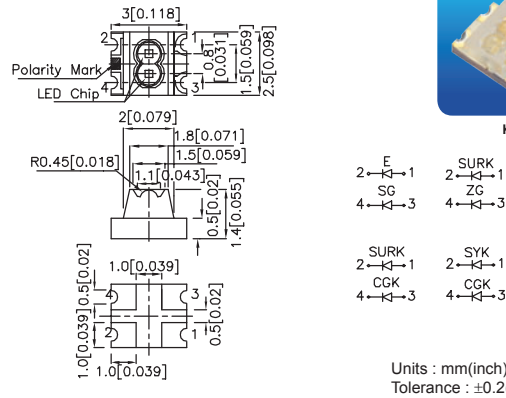 Units : mm(inch) Tolerance : ±0.2(0.008)
	GaP	568		12	20		
KPBL-3025SURKCGKC	AlGaInP	630	water clear	120	300	50°	
	AlGaInP	570		80	150		
KPBL-3025SURKZGC	AlGaInP	630	water clear	120	300	50°	
	InGaN	525		400	800		
KPBL-3025SYKCGKC	AlGaInP	590	water clear	200	400	50°	
	AlGaInP	570		80	150		

NOTES:
1. KP series custom-made is available upon request.
2. Luminous intensity value is traceable to CIE127-2007 standards.

MULTI-COLOR SMD LED

Part Number	Material	λD (nm)	Lens Type	Iv (mcd) @20mA Min.	Iv (mcd) @20mA Typ.	Viewing Angle 2θ1/2	Dimensions
KPTBD-3216ESGC	GaAsP/GaP	617	water clear	3	8	30°	3.2mm x 1.6mm x 1.8mm (Bi-Color)
	GaP	568		20	40		
KPTBD-3216SURKCGKC	AlGaInP	630	water clear	300	600	30°	
	AlGaInP	570		120	250		
KPTBD-3216SURKZGC	AlGaInP	630	water clear	300	600	30°	
	InGaN	525		500	1000		
KPTBD-3216SEJ3ZGGC	AlGaInP	625	water clear	1000	1500	30°	
	InGaN	525		700	1300		
KPTBD-3216SYKCGKC	AlGaInP	590	water clear	300	600	30°	
	AlGaInP	570		120	250		
KPBD-3224ESGC	GaAsP/GaP	617	water clear	12	40	20°	3.2mm x 2.4mm x 2.4mm (Dome Lens)
	GaP	568		20	55		
KPBD-3224SURKCGKC	AlGaInP	630	water clear	120	400	20°	
	AlGaInP	570		80	280		
KPBD-3224SURKZGC	AlGaInP	630	water clear	120	400	20°	
	InGaN	525		500	950		
KPBD-3224SYKCGKC	AlGaInP	590	water clear	400	800	20°	
	AlGaInP	570		80	280		
KAA-3528ESGCT	GaAsP/GaP	617	water clear	8	15	120°	3.5mm x 2.8mm
	GaP	568		12	30		
KAA-3528SURKCGKCT	AlGaInP	630	water clear	55	100	120°	
	AlGaInP	570		40	80		
KAA-3528SURKSYKCT	AlGaInP	630	water clear	55	100	120°	
	AlGaInP	590		120	240		

KPTBD-3216

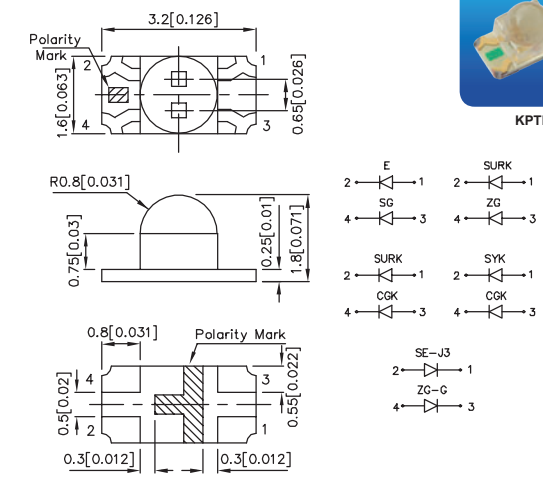

Units : mm(inch)
Tolerance : ±0.2(0.008)

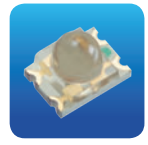
KPBD-3224

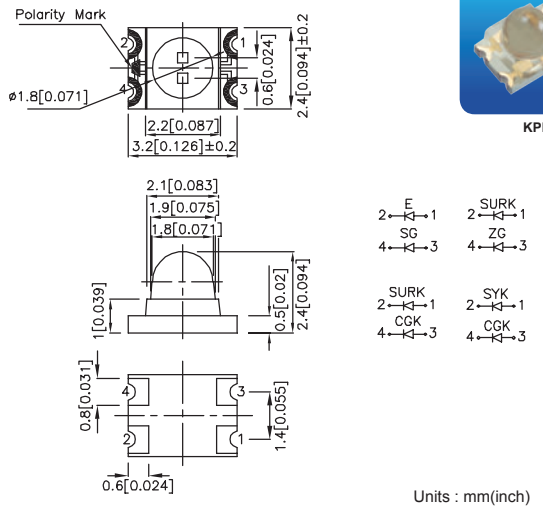

Units : mm(inch)
Tolerance : ±0.1(0.004)

KAA-3528

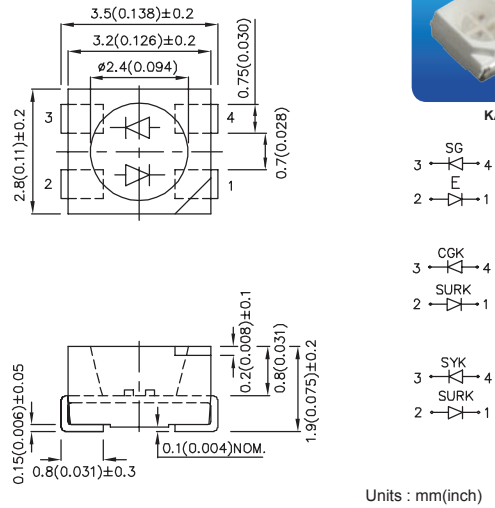

Units : mm(inch)
Tolerance : ±0.25(0.01)

NOTES:
1. KP series custom-made is available upon request.
2. Luminous intensity value is traceable to CIE127-2007 standards.

REVERSE MOUNT SMD LED

Part Number	Material	λD (nm)	Lens Type	Iv (mcd) @20mA		Viewing Angle	Dimensions
				Min.	Typ.	2θ1/2	
KPTR-3216SURCK	AlGaInP	630	water clear	40	80	140°	3.2mm x 1.6mm x 1.05mm (1206 Reverse Mount)
KPTR-3216SECK	AlGaInP	601	water clear	80	180	140°	
KPTR-3216SYCK	AlGaInP	590	water clear	80	150	140°	
KPTR-3216CGCK	AlGaInP	570	water clear	20	50	140°	
KPTR-3216ZGC	InGaN	525	water clear	200	400	140°	
KPTR-3216QBC-D	InGaN	465	water clear	40	100	140°	

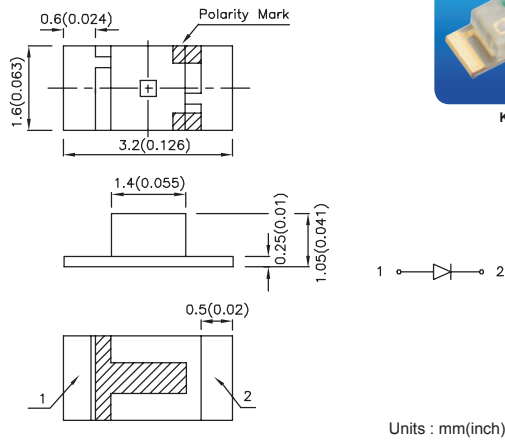

KPTR-3216

Units : mm(inch)
Tolerance : ±0.2(0.008)

TOP-EMITTING PLCC SMD LED

Part Number	Material	λD (nm)	Lens Type	Iv (mcd) @20mA		Viewing Angle	Dimensions
				Min.	Typ.	2θ1/2	
KA-2214SURSK	AlGaInP	630	water clear	55	100	120°	2.2mm x 1.4mm x 1.3mm
KA-2214ZGS	InGaN	525	water clear	400	700	120°	
KA-2214QBS-D	InGaN	465	water clear	80	150	120°	
KA-3021SURSK	AlGaInP	630	water clear	40	90	120°	3.0mm x 2.0mm x 1.3mm
KA-3021YS	GaAsP/GaP	588	water clear	8	15	120°	
KA-3021SYSK	AlGaInP	590	water clear	120	200	120°	
KA-3021SGS	GaP	568	water clear	12	20	120°	
KA-3021CGSK	AlGaInP	570	water clear	40	80	120°	
KA-3021ZGS	InGaN	525	water clear	400	800	120°	
KA-3021QBS-D	InGaN	465	water clear	80	120	120°	

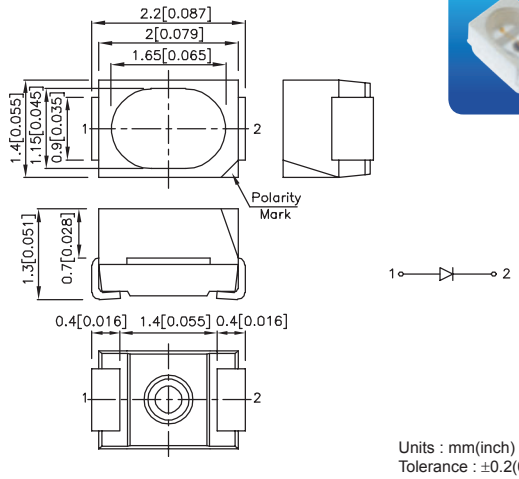

KA-2214

Units : mm(inch)
Tolerance : ±0.2(0.008)

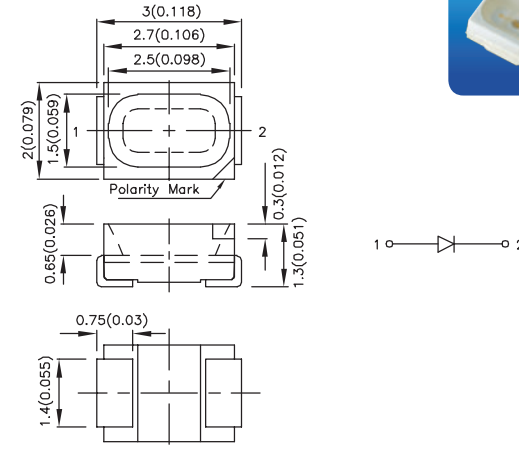

KA-3021

Units : mm(inch)
Tolerance : ±0.2(0.08)

NOTES:
1. KP series custom-made is available upon request.
2. Luminous intensity value is traceable to CIE127-2007 standards.

TOP-EMITTING PLCC SMD LED

Part Number	Material	λD (nm)	Lens Type	Iv (mcd) @20mA		Viewing Angle	Dimensions
				Min.	Typ.	2θ1/2	
KA-3022CGSK-4.5SF	AlGaInP	570	water clear	40	80	120°	3.0mm x 2.2mm x 1.5mm KA-3022-4.5SF 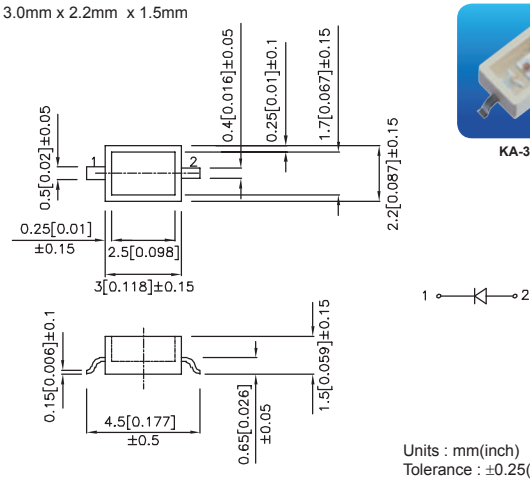 Units : mm(inch) Tolerance : ±0.25(0.01)
KA-3528SURCKT	AlGaInP	630	water clear	55	100	120°	3.5mm x 2.8mm x 1.9mm 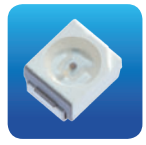 KA-3528 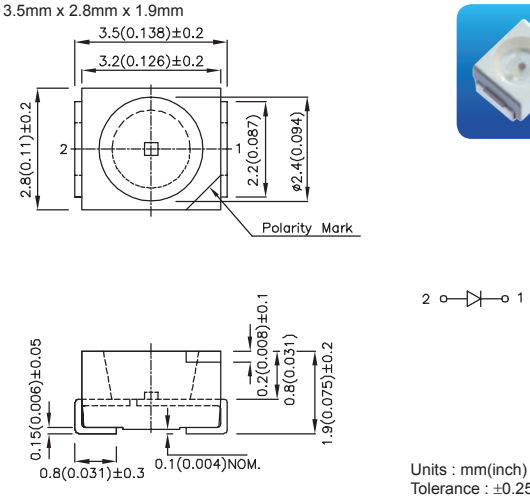 Units : mm(inch) Tolerance : ±0.25(0.01)
KA-3528SECKT	AlGaInP	601	water clear	120	230	120°	
KA-3528SYCKT	AlGaInP	590	water clear	120	250	120°	
KA-3528CGCKT	AlGaInP	570	water clear	40	100	120°	
KA-3528ZGCKT	InGaN	525	water clear	300	500	120°	
KA-3528QBS-D	InGaN	465	water clear	80	150	120°	
KA-3528VBS-D	InGaN	470	water clear	300	450	120°	

SUBMINIATURE SMD LED

Part Number	Material	λD (nm)	Lens Type	Iv (mcd) @20mA		Viewing Angle	Dimensions
				Min.	Typ.	2θ1/2	
KM2520EC03	GaAsP/GaP	617	water clear	20	50	20°	Subminiature Solid State Lamps Gull Wing Lead KM2520xxx03 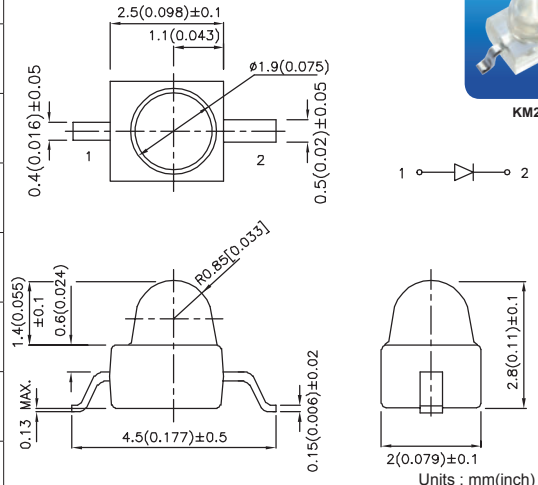 Units : mm(inch) Tolerance : ±0.25(0.01)
KM2520SURCK03	AlGaInP	630	water clear	500	1000	20°	
KM2520YC03	GaAsP/GaP	588	water clear	20	50	20°	
KM2520SYCK03	AlGaInP	590	water clear	1300	2300	20°	
KM2520SGC03	GaP	568	water clear	40	90	20°	
KM2520CGCK03	AlGaInP	570	water clear	400	800	20°	
KM2520ZGC03	InGaN	525	water clear	2700	6000	20°	
KM2520QBC-D03	InGaN	465	water clear	300	900	20°	

NOTE:
1. Luminous intensity value is traceable to CIE127-2007 standards.

SUBMINIATURE SMD LED

Part Number	Material	λD (nm)	Lens Type	Iv (mcd) @20mA		Viewing Angle	Dimensions
				Min.	Typ.	2θ1/2	
KM2520QBC-D08	InGaN	465	water clear	300	900	20°	Subminiature Solid State Lamps Yoke Lead
KM2520EC09	GaAsP/GaP	617	water clear	20	50	20°	Subminiature Solid State Lamps Z-Bend Lead
KM2520SURCK09	AlGaInP	630	water clear	500	1000	20°	
KM2520SECK09	AlGaInP	601	water clear	1000	1800	20°	
KM2520YC09	GaAsP/GaP	588	water clear	20	50	20°	
KM2520SYCK09	AlGaInP	590	water clear	1300	2300	20°	
KM2520SGC09	GaP	568	water clear	40	90	20°	
KM2520CGCK09	AlGaInP	570	water clear	400	800	20°	
KM2520ZGC09	InGaN	525	water clear	2700	6000	20°	
KM2520QBC-D09	InGaN	465	water clear	300	900	20°	

KM2520xxx08

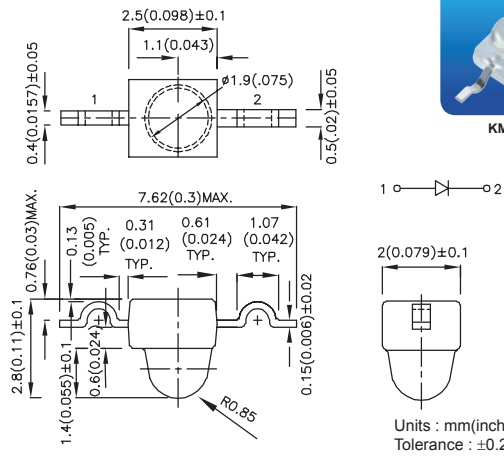

KM2520xxx09

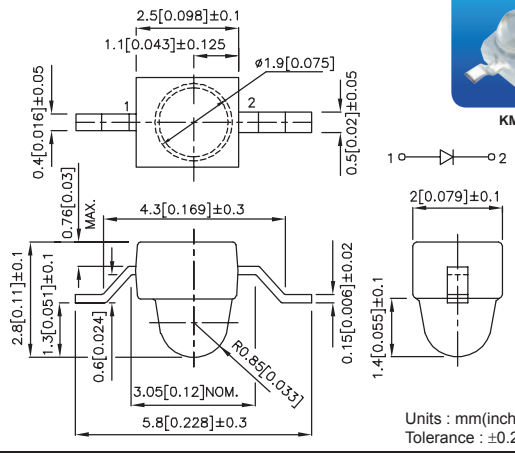

SOT-23 SMD LED

Part Number	Material	λD (nm)	Lens Type	Iv (mcd) @20mA		Viewing Angle	Dimensions
				Min.	Typ.	2θ1/2	
KM-23EC-F	GaAsP/GaP	617	water clear	3	5	170°	SOT-23 Surface Mount LED Lamp (3mm x 1.3mm)
KM-23YC-F	GaAsP/GaP	588	water clear	3	8	170°	
KM-23SGC-F	GaP	568	water clear	5	10	170°	

KM-23-F

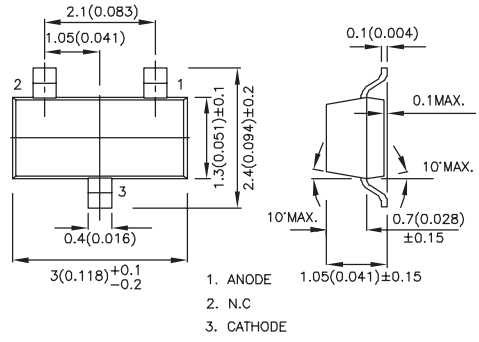

NOTE:
1. Luminous intensity value is traceable to CIE127-2007 standards.

AMBIENT LIGHT SENSOR

Part Number

KPS-3227SP1C

Electrical And Radiant Characteristics
(T_A =25°C,Unless Otherwise Specified)

Parameter	Symbol	Min.	Typ.	Max.	Unit	Test Condition
Collector Emitter Breakdown Voltage	BVceo	60	-	-	V	Iceo=100μA
Emitter Collector Breakdown Voltage	BVeco	4	-	-	V	Ieco=100μA
Collector Dark Current	I_D	-	10	100	nA	V_{CE}=5V Ev=0Lx
Light Current(1)	I_{PH1}	-	6	-	μA	V_{CE}=5V,Ev=100 Lx[1]
Light Current(2)	I_{PH2}		130	-	μA	V_{CE}=5V,Ev=1000 Lx[1]
Light Current(3)	I_{PH3}	-	950	-	μA	V_{CE}=5V,Ev=1000 Lx[2]
Light Current(4)	I_{PH4}	-	420	-	μA	V_{CE}=5V,Ev=1000 Lx[3]
Saturation Output Voltage	Vo	4.5	4.7	-	V	V_{CC}=5V,Ev=1000Lx[1], R_L=75KΩ
Peak Wavelength	λP	-	580	-	nm	-
Response Wavelength	λ	390	-	700	nm	>10% Response
Collector Emitter Saturation Voltage	$V_{CE(sat)}$	-	-	0.4	V	I_C=10 mA

Notes:
1.White Fluorescent light (Color Temperature = 6200K) is used as light source.
2.Illuminance by CIE standard illuminant-A/2856K,incandescet lamp.
3.Sunlight (Color Temperature = 4600K) is used as light source.

Dimensions

KPS-3227SP1C 3.2mm x 2.7mm x 1.1mm
(Ambient Light Sensor)

KPS-3227SP1C

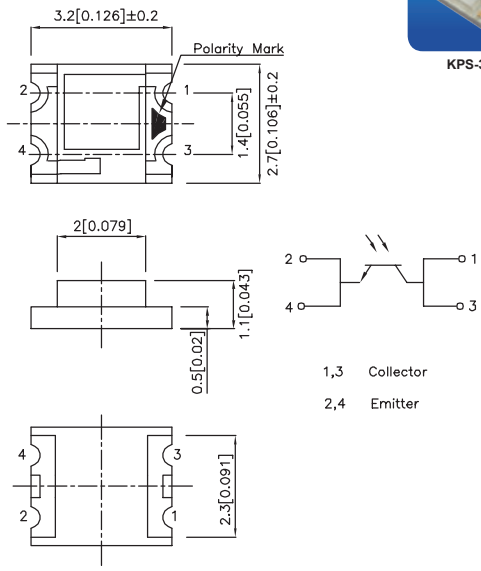

Units : mm(inch)
Tolerance : ±0.1(0.004)

COLOR SENSOR

Part Number

KPS-5130PD7C

Electrical And Radiant Characteristics
(T_A =25°C,Unless Otherwise Specified)

Parameter	Symbol	Condition		Min.	Typ.	Max.	Unit
Peak Sensitivity Wavelength	λP	Red		-	620	-	nm
		Green		-	550	-	
		Blue		-	470	-	
Light Current (1)	I_{L1}	100Lux [1] VR =5V	Red	-	0.039	-	μA
			Green	-	0.042	-	
			Blue	-	0.022	-	
Light Current (2)	I_{L2}	1000Lux [1] VR =5V	Red	-	0.427	-	μA
			Green	-	0.498	-	
			Blue	-	0.262	-	
Diameter of the irradiation sensitive area	D			-	2.0	-	mm
Irradiation sensitive area per element	A			-	0.85	-	mm^2
Photo sensibility of the single color areas	S_{Max}	λR=620 nm λG=550 nm λB=470 nm		-	0.33 0.25 0.18	-	A/W
Reverse Dark Current	I_D	VR =5V		-	-	10	nA

Note:
1.White fluorescent light (Color Temperature = 6500K) is used as light source.

Dimensions

KPS-5130PD7C 5.12mm x 3mm x 1.1mm
(RGB Color Sensor)

KPS-5130PD7C

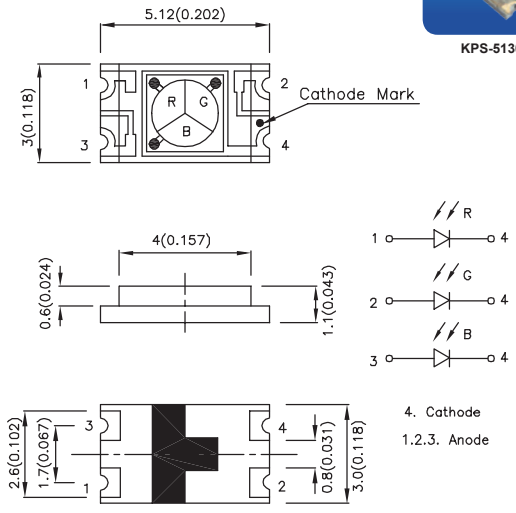

Units : mm(inch)
Tolerance : ±0.25(0.01)