THIS DRAWING IS UNPUBLISHED. RELEASED FOR PUBLICATION -,- .
© COPYRIGHT - BY TYCO ELECTRONICS CORPORATION. ALL RIGHTS RESERVED.

LOC	DIST
AD	00

REVISIONS

P	LTR	DESCRIPTION	DATE	DWN	APVD
	L	REV PER OG3C-0104-01	04SEP01	RB	JO
	L1	REVISED PER ECO-09-021510	14SEP09	KK	AEG

1. RECEPTACLE ACCEPTS AN .008-.014 THK. I.C. LEAD.

2. TWO .000030 MIN.THK.GOLD STRIPES IN CONTACT AREA, TIN-LEAD(93-7) ON CONTACT LEGS, BALANCE OF CONTACT NICKEL PLATED.

3. TWO .000015 MIN.THK.GOLD STRIPES IN CONTACT AREA, TIN-LEAD(93-7) ON CONTACT LEGS, BALANCE OF CONTACT NICKEL PLATED.

4. OBSOLETE PARTS: OBSOLETE CIS STREAMLINING PER D.RENAUD/D.SINISI

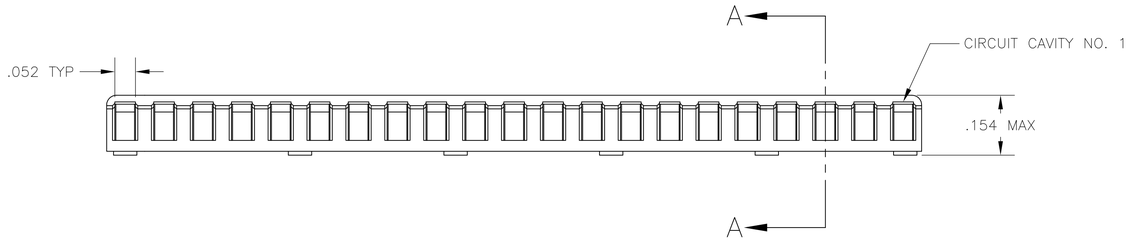

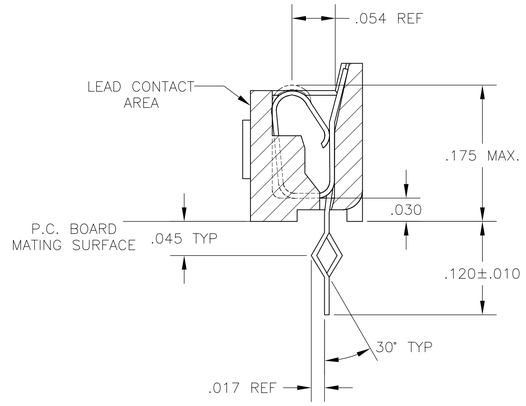

SECTION A-A

ROTATED 90° CW
SCALE 10:1
FOR -6, ~~-7~~ & ~~-8~~ ONLY
4

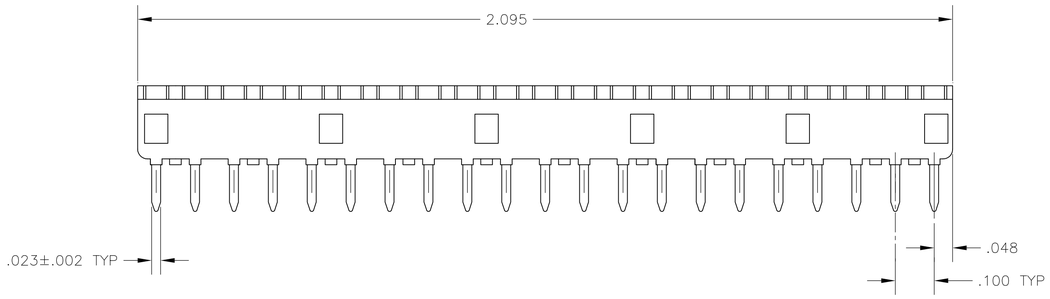

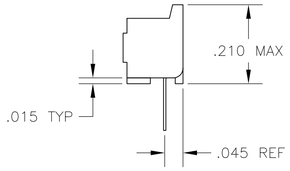

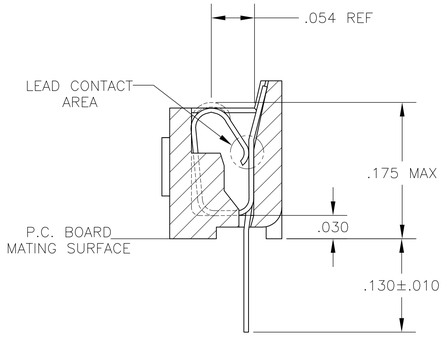

SECTION A-A

ROTATED 90° CW
SCALE 10:1
FOR -1, ~~-2~~ &-3 ONLY

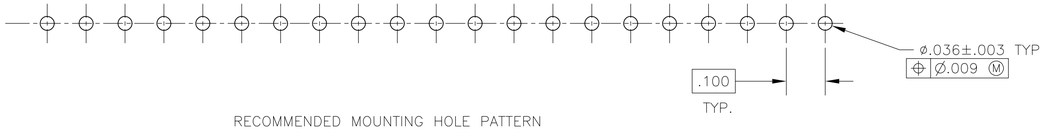

RECOMMENDED MOUNTING HOLE PATTERN

	CONTACT FINISH	CONTACT MAT'L	HOUSING MATERIAL	PART NO.
OBSOLETE	TINNED	PHOS.BRZ.	GLASS-FILLED THERMOPLASTIC, 94V-O, BLACK	643653-8
OBSOLETE	2	BE.CU.	GLASS-FILLED THERMOPLASTIC, 94V-O, BLACK	643653-7
4 OBSOLETE	TINNED	BE.CU.	GLASS-FILLED THERMOPLASTIC, 94V-O, BLACK	~~643653-6~~
SUPSD BY 643653-2	3	PHOS.BRZ.	GLASS-FILLED THERMOPLASTIC, 94V-O, BLACK	643653-4
	TINNED	PHOS.BRZ.	GLASS-FILLED THERMOPLASTIC, 94V-O, BLACK	643653-3
OBSOLETE	2	BE.CU.	GLASS-FILLED THERMOPLASTIC, 94V-O, BLACK	643653-2
	TINNED	BE.CU.	GLASS-FILLED THERMOPLASTIC, 94V-O, BLACK	643653-1

THIS DRAWING IS A CONTROLLED DOCUMENT.

DIMENSIONS: INCHES

TOLERANCES UNLESS OTHERWISE SPECIFIED:
0 PLC ± -
1 PLC ± -
2 PLC ± -
3 PLC ± .005
4 PLC ± -
ANGLES ± 1°

MATERIAL: SEE TABLE
FINISH: SEE TABLE

DWN M.CYRUS 01JUNE84
CHK N.JONES 03JULY84
APVD J.GRAY 10JULY84
PRODUCT SPEC 108-1066
APPLICATION SPEC 114-1049
WEIGHT -

Tyco Electronics
Tyco Electronics Corporation
Harrisburg, Pa 17105-3608

NAME: SOCKET ASSY, SIP, 21 POS, DIPLOMATE DL
-

SIZE	CAGE CODE	DRAWING NO	RESTRICTED TO
A1	00779	C-643653	-

CUSTOMER DRAWING | SCALE 5:1 | SHEET 1 OF 1 | REV L1