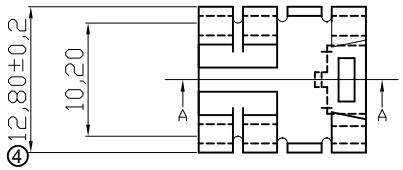

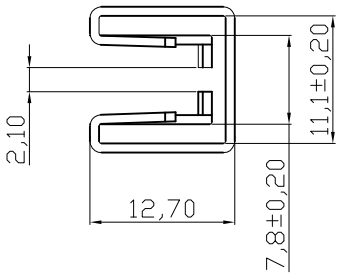

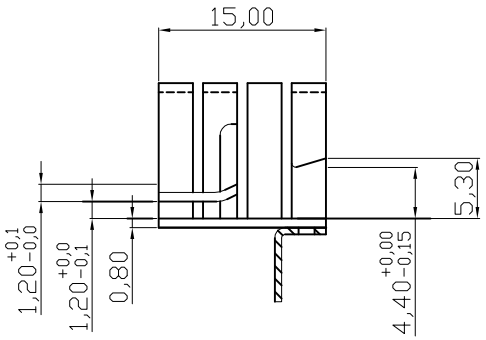

SECTION A-A

Notes
Material : AL 5052 T=0.8±0.1 MM
Finished : Black Anodize

RoHS compliant
Unit: mm

Scale	FREE						Date	Name	Customer-No.
TOLERANCE						Drawn	11.08.2009	Dean	
UNIT	±0.5	④	Update to correct dimension	19.11.2013	Amy	Approved	19.11.2013	Amy	ASSMANN WSW-No. V8508I
		③	Modify the position of pin	18.04.2011	Rale				Drawing-No. ASS 0858 HS rev04
DIM	TOL	②	Modify drawing layout	10.03.2010	Alex				
X.°	±X°	①	Drawn	11.08.2009	Dean				
X.X°	±X°								Replace / Sheet
Angle	TOL	Id.	Modification	Date	Name				

ASSMANN WSW components