THIS DRAWING IS UNPUBLISHED. RELEASED FOR PUBLICATION 2005
© COPYRIGHT 2005 BY TYCO ELECTRONICS CORPORATION. ALL RIGHTS RESERVED.

LOC	DIST
A1	–

REVISIONS

P	LTR	DESCRIPTION	DATE	DWN	APVD
	A2	Layout. Dimensions	28SEP2005	AK	AK
	A3	ECR-06-019142	08AUG2006	AL	BF
	A4	ECR-07-001510	26JAN07	AL	BF

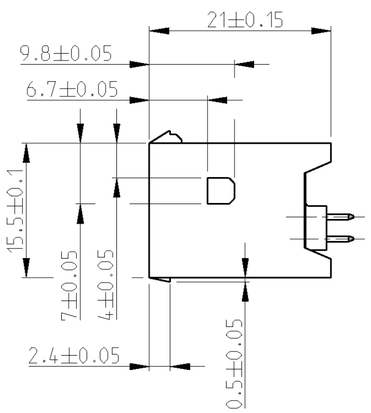

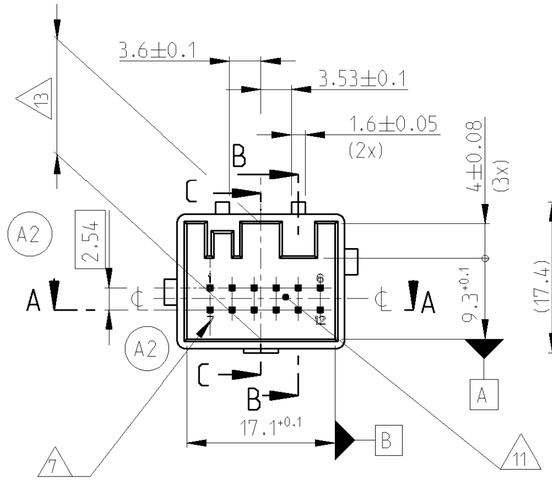

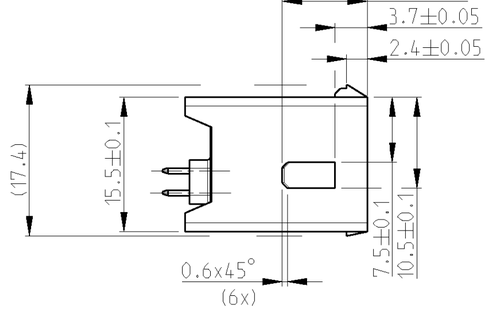

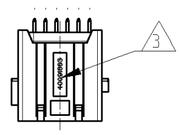

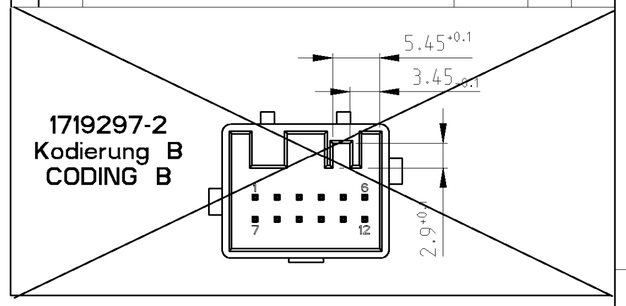

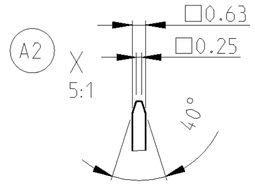

B-B

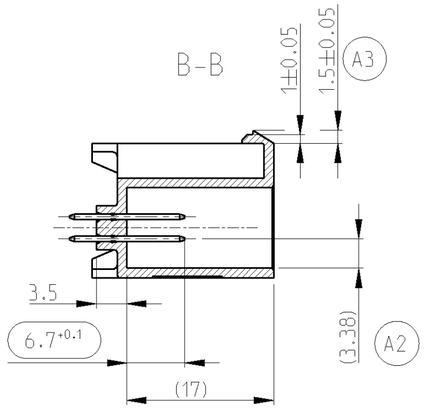

C-C

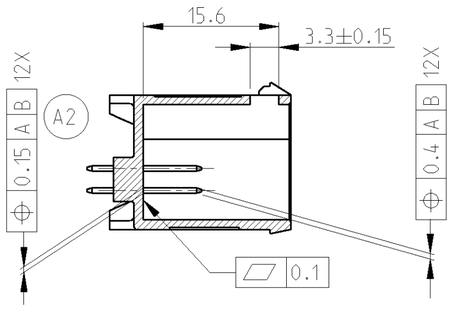

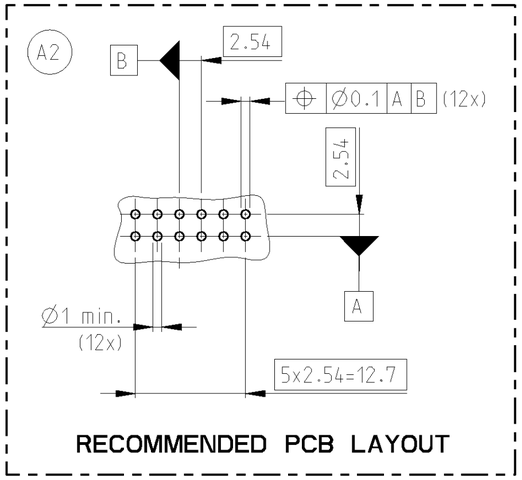

A-A

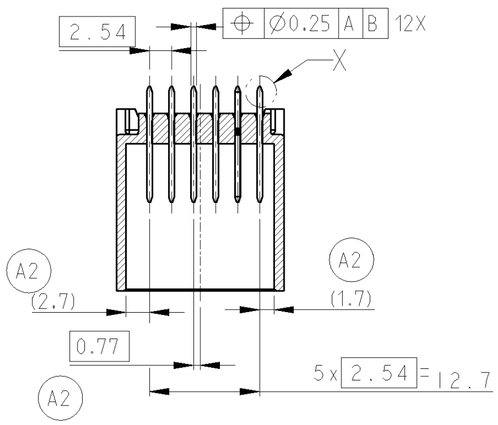

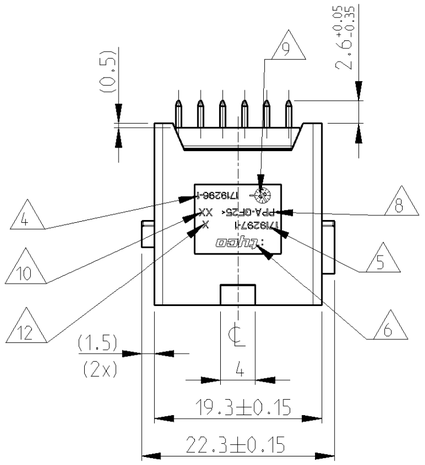

Bemerkungen
NOTES

1. Massgebend ist der deutsche Text
   ONLY THE GERMAN-LANGUAGE VERSION SHALL BE BINDING
2. Mittelschrift nach DIN 1451. erhaben 0.15. Feld vertieft 0.2
   CHARACTERS ACCORDING TO DIN 1451. RAISED 0.15. FIELD SUNK 0.2
3. Kundenteile Nr.
   CUSTOMER PART NO.
4. Tyco-Teile Nr.
   TYCO-PART NO.
5. Tyco-Assy Nr.
   TYCO-ASS'Y NO.
6. Tyco-Logo
   TYCO-LOGO
7. Kammerbezeichnung
   CAVITY IDENTIFICATION
8. Materialkennzeichnung
   MATERIAL IDENTIFICATION
9. Produktions-Datum
   PRODUCTION-DATE
10. Nestmarkierung
    CAVITY MARKING
11. Tyco Schnittstelle C-114-18715 Rev. A2
    TYCO CONNECTOR INTERFACE ACC. C-114-18715 REV. A2
12. Werkstoffkennzeichnung
    REVISIONS-NUMBER
13. Verzug zulässig bis max.0.4
    WARPAGE PERMITTED TO MAX. 0.4
14. Nicht bemaßte Radien R0.2
    ALL RADII R0.2 EXCEPT AS NOTED
15. Verpackung in Karton
    PACKAGING IN CARDBOARD BOX
16. Passend zu Buchsenkontakt siehe Zeichnung: C-1355080
    SUITABLE FOR SOCKET CONTACT SEE DRAWING: C-1355080

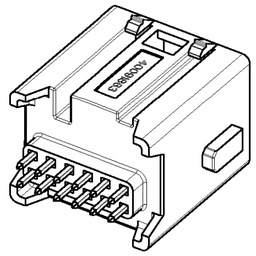

CUSTOMER Nr.	ASSY. Nr.	REV.	COD.	QTY REQD PER ASSY	FINISH	MATERIAL	REV.	DESCRIPTION	ITEM NO
–	1719297-2	A	B	12	TINNED	CuMg0.1	A	CONTACT	2
				1	BLACK	PPA-GF25	A	HOUSING	1
40091863	1719297-1	A	A	12	TINNED 1 TO 3 µ TIN OVER 1.3 TO 2.2 µm NICKEL	CuMg0.1	A	CONTACT	2
				1	BLACK	PPA-GF25	A	HOUSING	1

<---- REVISION OF EACH ASSY NO. (WHEN BLANK USE DWG. REVISION)

PARTS LIST

-1 AS SHOWN
wie gezeichnet

THIS DRAWING IS A CONTROLLED DOCUMENT FOR TYCO ELECTRONICS CORPORATION. IT IS SUBJECT TO CHANGE AND THE CONTROLLING ENGINEERING ORGANIZATION SHOULD BE CONTACTED FOR THE LATEST REVISION.

DIMENSIONS: mm

TOLERANCES UNLESS OTHERWISE SPECIFIED: 0 PLC ±; 1 PLC ±; 2 PLC ±; 3 PLC ±; 4 PLC ±; ANGLES ±1°; ACC.TO DIN 16901-140 CENTRIC TO NOMINAL DIM

MATERIAL –

FINISH –

DWN PRASHANT R K 13SEP2005
CHK Koperly 20SEP2005
APVD –
PRODUCT SPEC –
APPLICATION SPEC –
WEIGHT –

tyco Electronics
tyco Electronics AMP GmbH
D- 64625 . Bensheim

NAME 12POS.MODU II CP.HEADER

SIZE A2 | CAGE CODE 00779 | DRAWING NO C-1719297 | RESTRICTED TO –

CUSTOMER DRAWING | SCALE 2:1 | SHEET 1 OF 1 | REV A4