THIS DRAWING IS UNPUBLISHED. RELEASED FOR PUBLICATION - ,- .
© COPYRIGHT - By - ALL RIGHTS RESERVED.

LOC	DIST
AD	00

REVISIONS

P	LTR	DESCRIPTION	DATE	DWN	APVD
	H2	REVISED PER ECO-11-004917	11MAR11	RK	HMR

1. TRUE POSITION TOLERANCE OF POST TIPS APPLIES WHEN HEADERS ARE HELD FLAT AGAINST POINTED CIRCUIT BOARD.

2. OBSOLETE PART NUMBER

3. .000100-.000200 BRIGHT TIN OVER .000050-.000100 NICKEL.

4. .000100-.000200 BRIGHT TIN-LEAD OVER .000050-.000100 NICKEL.

5. PRELIMINARY PART

6. .000100-.000200 MATTE TIN OVER .000050 NICKEL.

7. OBSOLETE PARTS: OBSOLETE CIS STREAMLINING PER D.RENAUD/D.SINISI

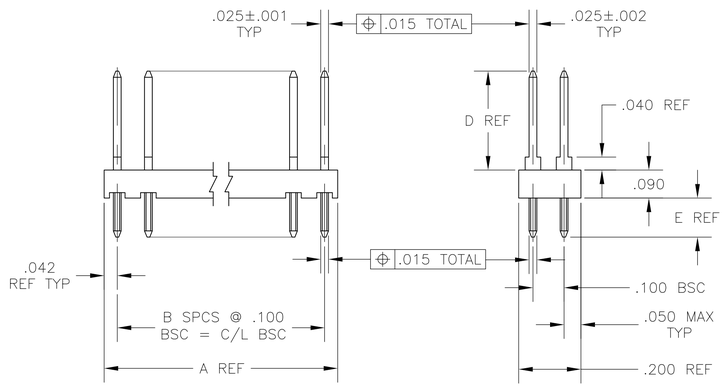

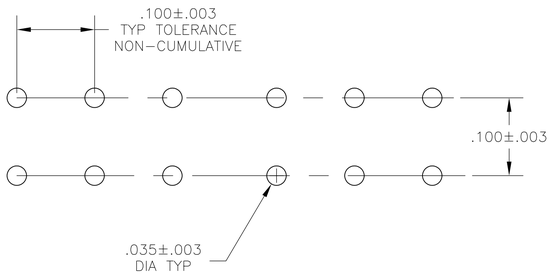

RECOMMENDED HOLE LAYOUT

	FINISH	E	D	C	B	A	NO OF POSN	PART NUMBER
	6	.125	.318	3.900	39	3.984	80	9-87543-0
	6	.125	.318	2.400	24	2.484	50	7-87543-5
7 OBSOLETE	6	.125	.318	1.900	19	1.984	40	~~7-87543-0~~
7 OBSOLETE	6	.125	.318	1.600	16	1.684	34	~~6-87543-7~~
7 OBSOLETE	6	.125	.318	1.400	14	1.484	30	~~6-87543-5~~
	6	.125	.318	1.200	12	1.284	26	6-87543-3
7 OBSOLETE	6	.125	.318	1.000	10	1.084	22	~~6-87543-1~~
	6	.125	.318	.900	9	.984	20	6-87543-0
	6	.125	.318	.700	7	.784	16	5-87543-8
	6	.125	.318	.600	6	.684	14	5-87543-7
	6	.125	.318	.500	5	.584	12	5-87543-6
	6	.125	.318	.400	4	.484	10	5-87543-5
7 OBSOLETE	6	.125	.318	.300	3	.384	8	~~5-87543-4~~
	6	.125	.318	.200	2	.284	6	5-87543-3
	6	.125	.318	–	–	.084	2	5-87543-1
	3	.125	.318	.500	5	.584	12	5 4-87543-3
	4	.125	.318	4.100	41	4.184	80	2 4-87543-2
		.125	.318	4.000	40	4.084	80	2 4-87543-1
		.125	.318	3.900	39	3.984	80	4-87543-0
		.125	.318	3.800	38	3.884	78	2 3-87543-9
		.125	.318	3.700	37	3.784	76	2 3-87543-8
		.125	.318	3.600	36	3.684	74	2 3-87543-7
		.125	.318	3.500	35	3.584	72	2 3-87543-6
SUPERCEDED BY 3-103322-5		.125	.318	3.400	34	3.484	70	3-87543-5
		.125	.318	3.300	33	3.384	68	2 3-87543-4
		.125	.318	3.200	32	3.284	66	2 3-87543-3
SUPERCEDED BY 3-103322-2		.125	.318	3.100	31	3.184	64	3-87543-2
		.125	.318	3.000	30	3.084	62	2 3-87543-1
SUPERCEDED BY 3-103322-0		.125	.318	2.900	29	2.984	60	3-87543-0
SUPERCEDED BY 2-103322-5		.125	.318	2.800	28	2.884	58	2-87543-9
		.125	.318	2.700	27	2.784	56	2 2-87543-8
		.125	.318	2.600	26	2.684	54	2 2-87543-7
		.125	.318	2.500	25	2.584	52	2 2-87543-6
		.125	.318	2.400	24	2.484	50	2-87543-5
		.125	.318	2.300	23	2.384	48	2 2-87543-4
		.125	.318	2.200	22	2.284	46	2 2-87543-3
		.125	.318	2.100	21	2.184	44	2 2-87543-2
SUPERCEDED BY 2-103322-1		.125	.318	2.000	20	2.084	42	2-87543-1
7 OBSOLETE		.125	.318	1.900	19	1.984	40	~~2-87543-0~~
		.125	.318	1.800	18	1.884	38	2 1-87543-9
		.125	.318	1.700	17	1.784	36	2 1-87543-8
		.125	.318	1.600	16	1.684	34	1-87543-7
SUPERCEDED BY 1-103322-6		.125	.318	1.500	15	1.584	32	1-87543-6
7 OBSOLETE		.125	.318	1.400	14	1.484	30	~~1-87543-5~~
SUPERCEDED BY 1-103322-4		.125	.318	1.300	13	1.384	28	1-87543-4
		.125	.318	1.200	12	1.284	26	1-87543-3
SUPERCEDED BY 1-103322-2		.125	.318	1.100	11	1.184	24	1-87543-2
7 OBSOLETE		.125	.318	1.000	10	1.084	22	~~1-87543-1~~
		.125	.318	.900	9	.984	20	1-87543-0
SUPERCEDED BY 103322-9		.125	.318	.800	8	.884	18	87543-9
		.125	.318	.700	7	.784	16	87543-8
		.125	.318	.600	6	.684	14	87543-7
		.125	.318	.500	5	.584	12	87543-6
		.125	.318	.400	4	.484	10	87543-5
		.125	.318	.300	3	.384	8	87543-4
7 SUPERCEDED BY 5-87543-3		.125	.318	.200	2	.284	6	~~87543-3~~
SUPERCEDED BY 103322-2		.125	.318	.100	1	.184	4	87543-2
	4	.125	.318	–	–	.084	2	87543-1

THIS DRAWING IS A CONTROLLED DOCUMENT.

DIMENSIONS: INCHES

TOLERANCES UNLESS OTHERWISE SPECIFIED:
0 PLC ± –
1 PLC ± –
2 PLC ± –
3 PLC ± –
4 PLC ± –
ANGLES ± –

MATERIAL: HSG-GLASS FILLED NYLON COLOR: BLACK CONTACT-PHOS BRONZE

FINISH: SEE TABLE

DWN M.E.PASTEL 20 NOV 87
CHK T.C. CLARK 20 NOV 87
APVD T.C. CLARK 20 NOV 87

PRODUCT SPEC —
APPLICATION SPEC —
WEIGHT —

CUSTOMER DRAWING

TE Connectivity

NAME: ASSEMBLY, MOD II, HEADER, DOUBLE ROW, .100X.100

SIZE	CAGE CODE	DRAWING NO	RESTRICTED TO
A1	00779	C-87543	—

SCALE 4:1 SHEET 1 OF 1 REV H2