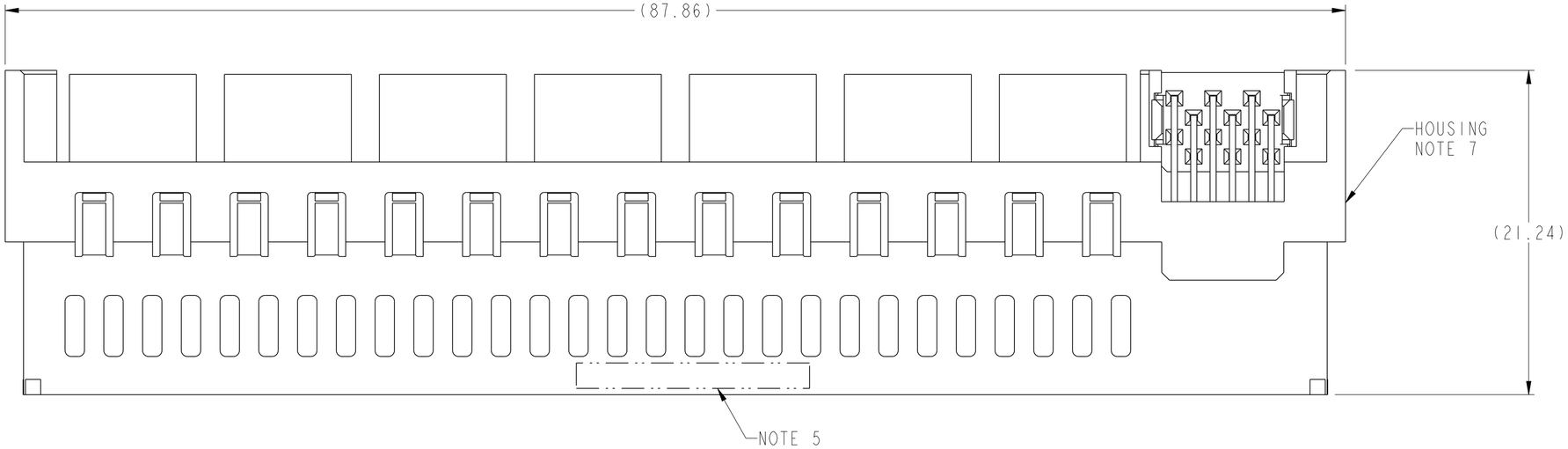

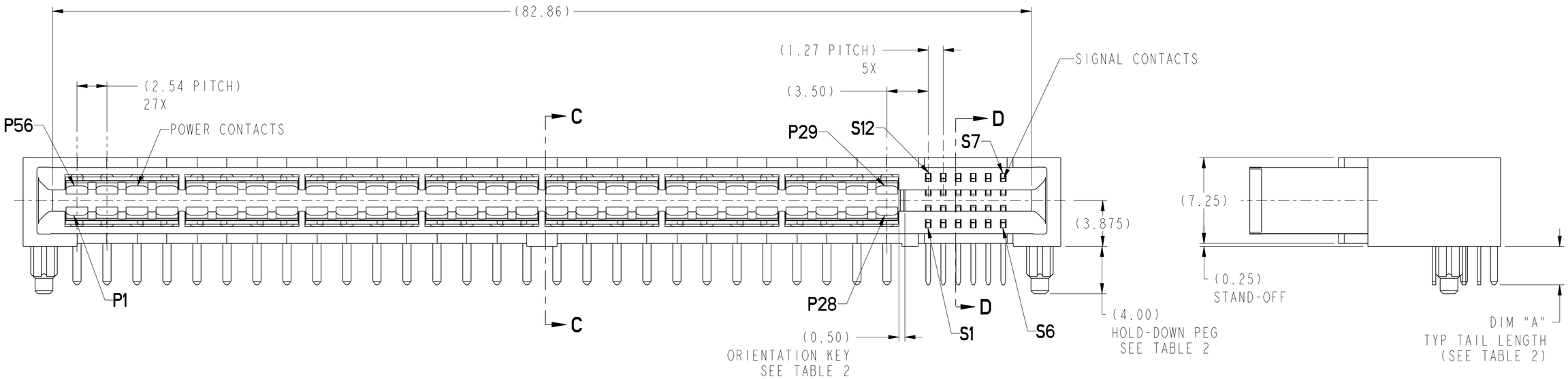

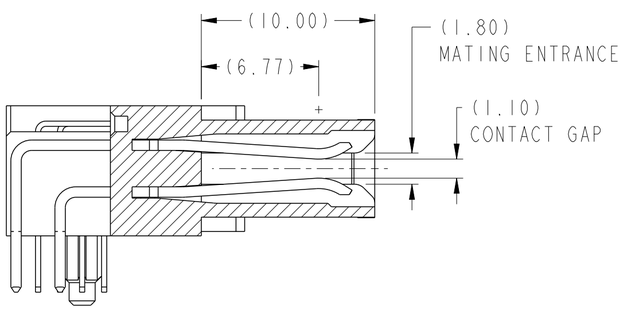

SECTION C-C

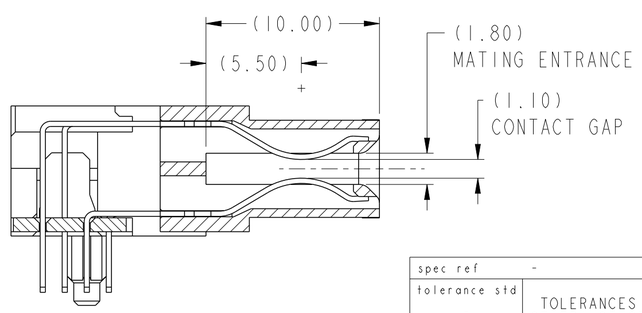

SECTION D-D

spec ref	-			dr	wcadmin	2009/09/15	projection	MM	size A2 / scale 4:1
tolerance std - ASME Y14.5	TOLERANCES UNLESS OTHERWISE SPECIFIED			eng	Wei-Long Zhang	2011/12/15			ecn no ELX-DG-008906-1
				chr	Jon Qin	2011/12/16			
				appr	Pei-Ming Zheng	2011/12/16	product family	HPCE	rel level Released
surface - ASME Y14.5	linear	0.X	±-	FCI	title	R/A RECT (56P-12S) HIGH POWER CARD EDGE	dwg no	10096926	rev D
		0.XX	±-						
		0.XXX	±-						
	angular	0°	±-°	www.fci.com	cat. no.	-	Product - Customer Drw		sheet 1 of 4

Copyright FCI.

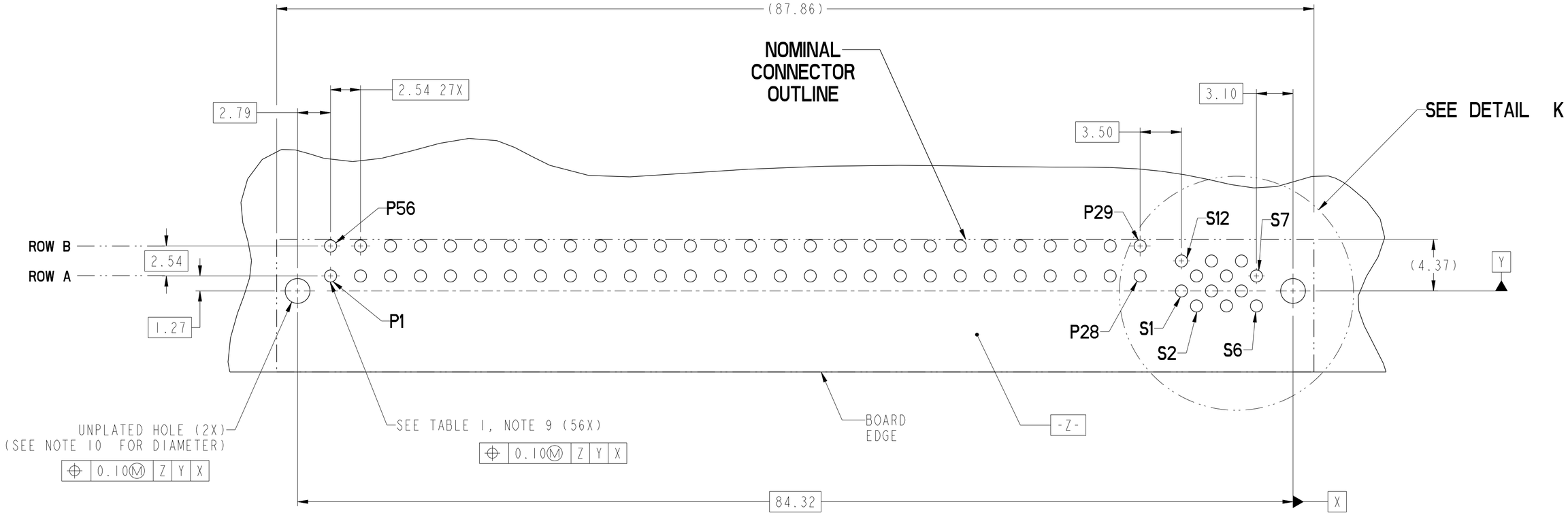

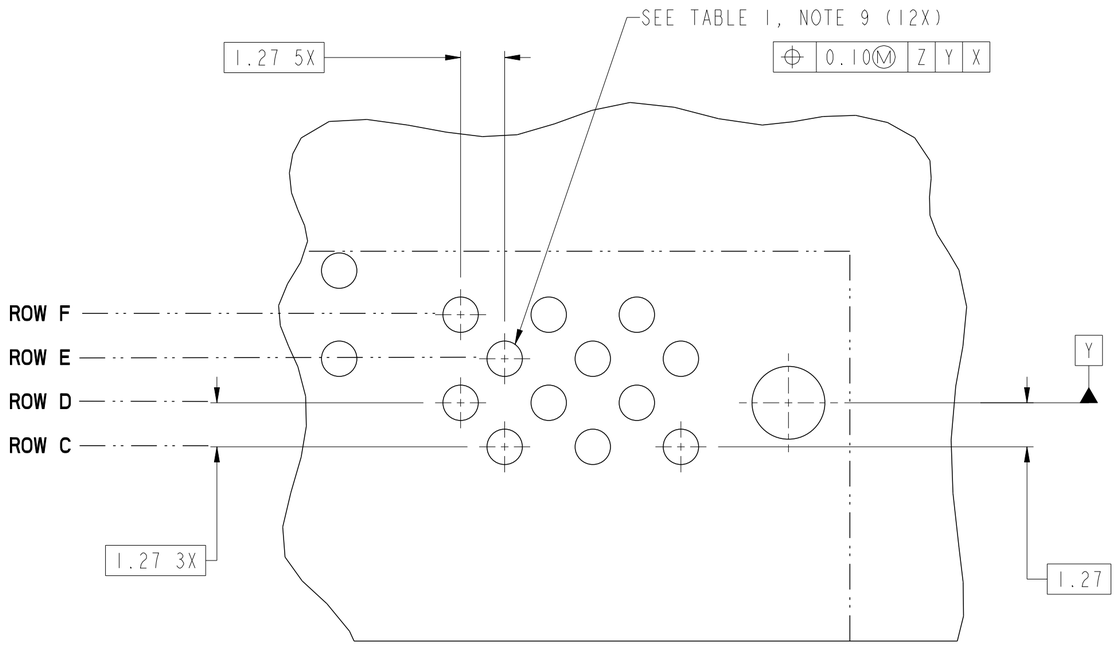

DETAIL K
SCALE 8:1

RECOMMENDED PCB LAYOUT
VIEWED FROM CONNECTOR SIDE

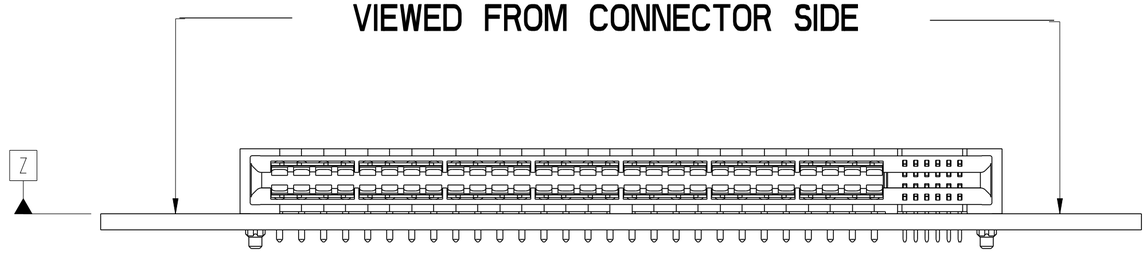

spec ref -		dr	wcadmin	2009/09/15	projection	MM	size A2 / scale 4:1
tolerance std - ASME Y14.5	TOLERANCES UNLESS OTHERWISE SPECIFIED	eng	Wei-Long Zhang	2011/12/15			ecn no ELX-DG-008906-1
		chr	Jon Qin	2011/12/16			
		appr	Pei-Ming Zheng	2011/12/16	product family	HPCE	rel level Released
surface - ✓ ASME Y14.5	linear 0.X ±- / 0.XX ±- / 0.XXX ±- / angular 0° ±-°	FCI	title	R/A RECT (56P-12S) HIGH POWER CARD EDGE	dwg no	10096926	rev D
		www.fci.com	cat. no. -		Product - Customer Drw		sheet 2 of 4

Copyright FCI.

CONTACT TYPE	TOP LAYER DESCRIPTION	TABLE 1 (HPCE / SOLDER TAILS) PLATED THROUGH-HOLE REQUIREMENTS				
		DRILLED HOLE DIAMETER	COPPER THICKNESS	TIN-LEAD THICKNESS	TIN THICKNESS	FINISHED HOLE DIAMETER
POWER & SIGNAL	TIN-LEAD	1.10-1.16 (1.15 DRILL)	0.025 - 0.050	0.005 - 0.015	--	0.94 - 1.10
	IMMERSION TIN	1.10-1.16 (1.15 DRILL)	0.025 - 0.050	--	0.9 - 1.5um	0.94 - 1.10
	COPPER (SEE NOTE 8)	1.10-1.16 (1.15 DRILL)	0.025 - 0.050	--	--	0.94 - 1.10

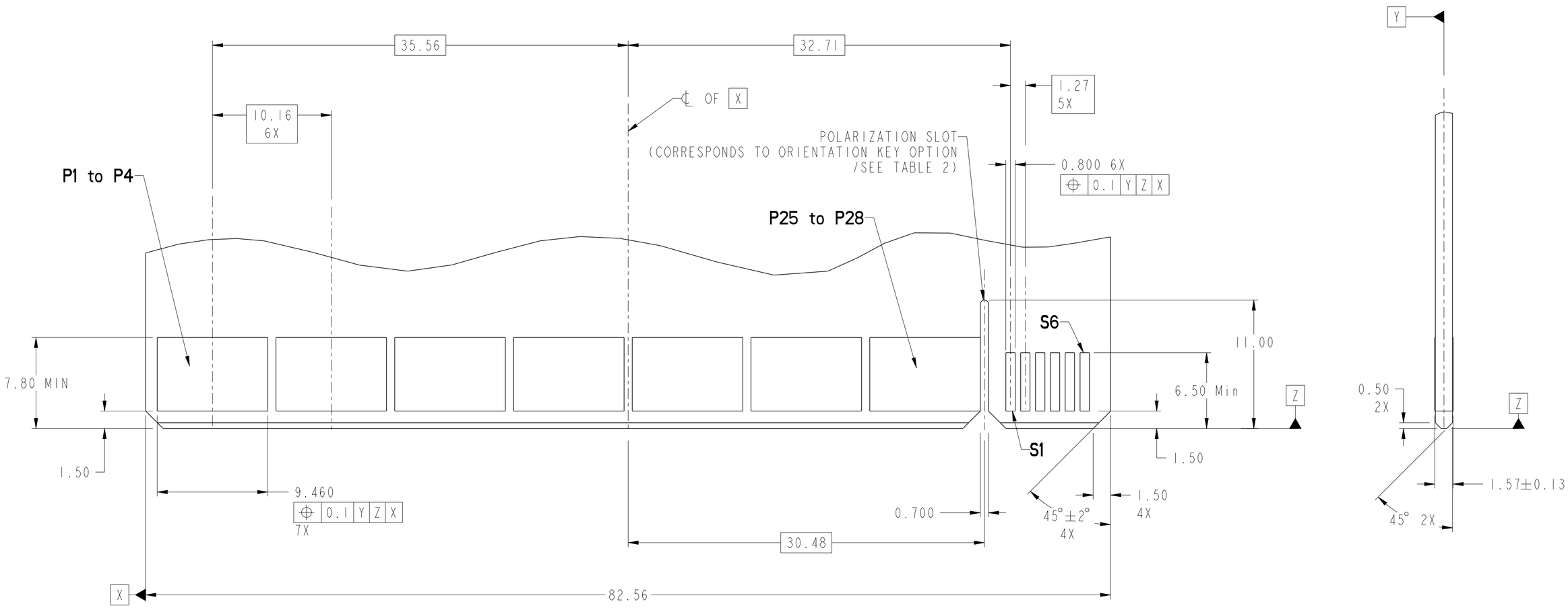

RECOMMENDED MATING BOARD FOOTPRINT

spec ref -		dr	wcadmin	2009/09/15	projection	MM	size A2 / scale 4:1
tolerance std - ASME Y14.5	TOLERANCES UNLESS OTHERWISE SPECIFIED	eng	Wei-Long Zhang	2011/12/15			ecn no ELX-DG-008906-1
		chr	Jon Qin	2011/12/16			
		appr	Pei-Ming Zheng	2011/12/16	product family	HPCE	rel level Released
surface - ✓	linear 0.X ±- / 0.XX ±- / 0.XXX ±-	FCI	title	R/A RECT (56P-12S) HIGH POWER CARD EDGE	dwg no	10096926	rev D
ASME Y14.5	angular 0° ±-°	www.fci.com	cat. no. -		Product - Customer Drw		sheet 3 of 4

Copyright FCI.

HPCE PART NUMBER (TABLE 2)

PART NUMBER	TAIL TYPE	HOLD-DOWN OPTION	ORIENTATION KEY	DIM "A" TYPICAL TAIL LENGTH
10096926-001LF	SOLDER TAIL	NO	YES	3.25±0.25
10096926-002LF			NO	
10096926-003LF		YES	YES	
10096926-004LF			NO	
10096926-005LF		NO	YES	4.05±0.25
10096926-006LF			NO	
10096926-007LF		YES	YES	
10096926-008LF			NO	
10096926-009LF		NO	YES	4.85±0.25
10096926-010LF			NO	
10096926-011LF		YES	YES	
10096926-012LF			NO	

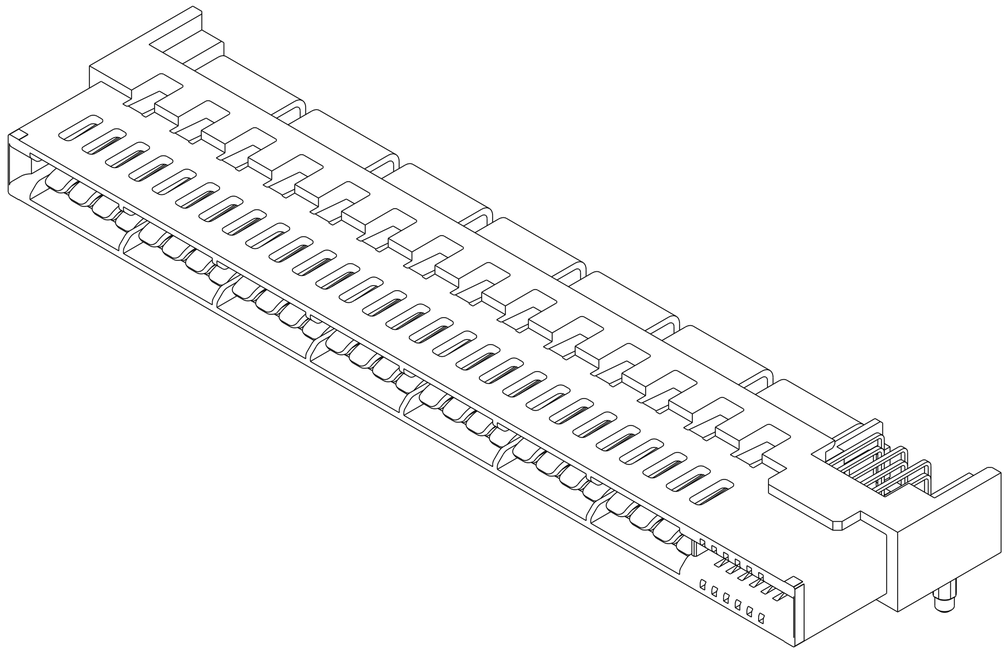

NOTES:

1. CONNECTOR MATERIALS:

   HOUSING: HIGH TEMPERATURE THERMAL PLASTIC, BLACK
   UL 94V-0 COMPLIANT
   CONTACTS: HIGH PERFORMANCE COPPER ALLOY.

2. CONTACT FINISH REF. GS-12-604 SECTION 5.2.

3. PRODUCT SPECIFICATION: GS-12-604.

4. APPLICATION SPECIFICATION: GS-20-128.

5. PRODUCT MARKING (FCI - PART NUMBER & DATE CODE) ON HOUSING IN AREA SHOWN.

6. PACKAGING MEETS FCI SPECIFICATION GS-14-937.

7. HOUSING COMPONENT WILL WITHSTAND EXPOSURE TO 260°C PEAK TEMPERATURE FOR 60 SECONDS IN A CONVECTION, INFRA-RED, OR VAPOR PHASE REFLOW OVEN.

8. COPPER PLATING THICKNESS IN CENTER OF VIA-HOLE CAN BE NO MORE THAN 0.003 LESS THAN OTHER AREAS.

9. ALL HOLE SIZES ARE FINISHED HOLE SIZES.

10. MOUNTING HOLES ARE UNPLATED
    ∅ 2.10 +/- 0.1 FOR SOLDER TAILS

spec ref -	dr	wcadmin	2009/09/15	projection	MM
tolerance std - ASME Y14.5 / TOLERANCES UNLESS OTHERWISE SPECIFIED	eng	Wei-Long Zhang	2011/12/15		
	chr	Jon Qin	2011/12/16		
	appr	Pei-Ming Zheng	2011/12/16	product family	HPCE
surface - ✓ / linear 0.X ±- / 0.XX ±- / 0.XXX ±- / angular 0° ±-° / ASME Y14.5	FCI www.fci.com	title: R/A RECT (56P-12S) HIGH POWER CARD EDGE		dwg no	10096926
	cat. no. -	Product - Customer Drw		sheet 4 of 4	

size	A2
scale	4:1
ecn no	ELX-DG-008906-1
rel level	Released
rev	D

Copyright FCI.