THIS DRAWING IS UNPUBLISHED. RELEASED FOR PUBLICATION -,- .
© COPYRIGHT - By - ALL RIGHTS RESERVED.

LOC	DIST
AF	50

REVISIONS

P	LTR	DESCRIPTION	DATE	DWN	APVD
	U	REVISED PER ECR-13-001204	19JUN13	KH	PD

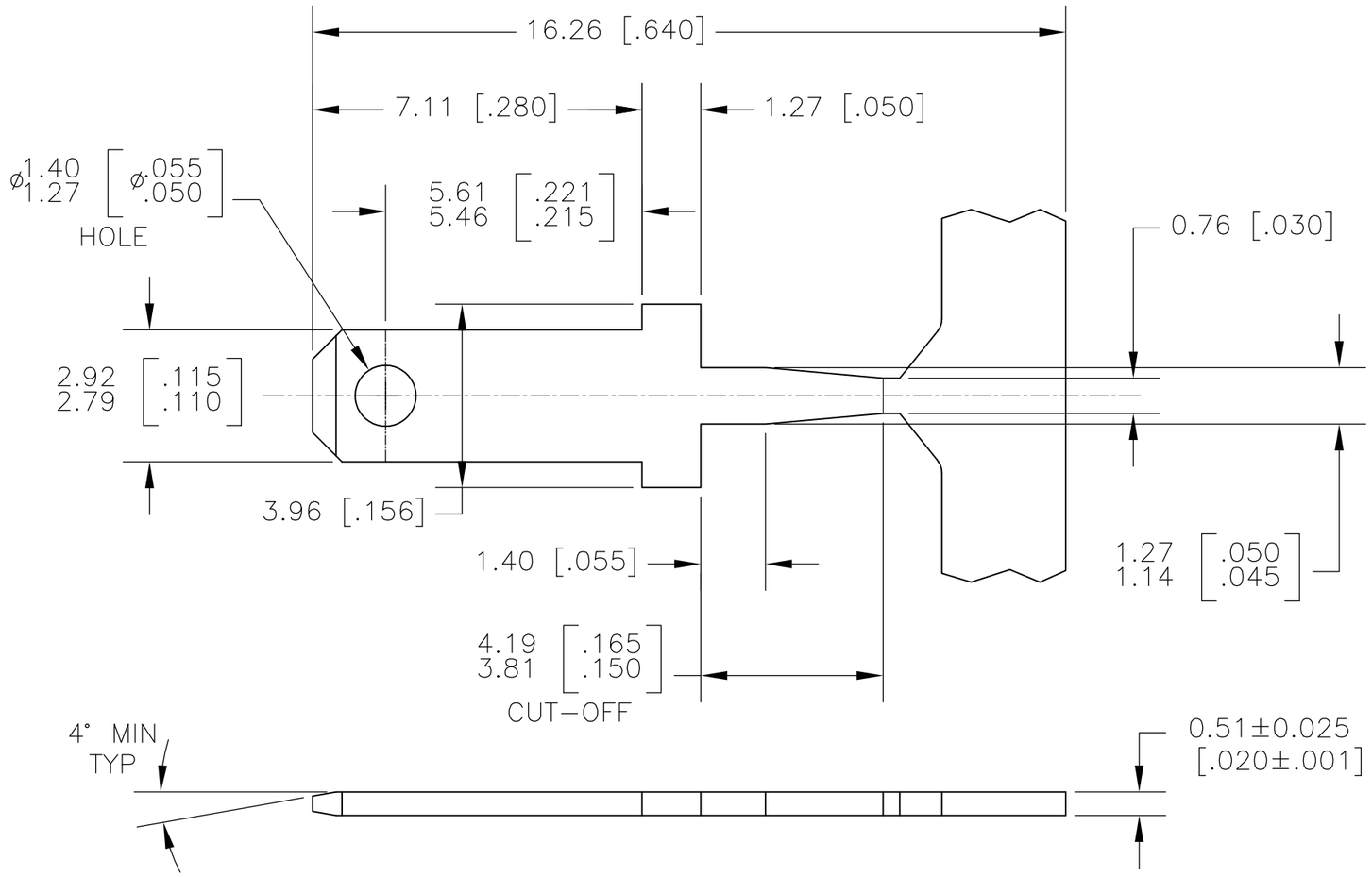

1 CONTINUOUS STRIP ON REELS

△2 PART TO MEET AMP SOLDERABILITY SPEC 109-11-2 (MILDLY ACTIVATED ROSIN)

3 FITS 1.22/1.11 [.048/.044] DIA HOLE IN PC BOARD. WHEN PLATED THRU HOLES ARE TO BE USED, ADJUSTMENT TO HOLE DIA'S SHOULD BE MADE TO ALLOW FOR THE PLATING.

△4 PRELIMINARY - NOT FOR PRODUCTION, TO BE REELED ON PLASTIC REELS.

△5 SPLICE FREE REELING.

△6 0.00381 [.000150] MIN TIN OVER 0.00254 [.000100] MIN COPPER.

△7 0.00381 [.000050] MIN TIN OVER COPPER.

△8 OBSOLETE PARTS: OBSOLETE CIS STREAMLINING PER D.RENAUD/D.SINISI

△8	OBSOLETE	△6	△5 ~~62395-4~~
		△6	△4 62395-3
SUPERSEDED BY 62395-1		△7	△2 ~~62395-2~~
		△6	62395-1
		FINISH	PART NO.

THIS DRAWING IS A CONTROLLED DOCUMENT.

DIMENSIONS: MM [INCHES]

TOLERANCES UNLESS OTHERWISE SPECIFIED:
0 PLC ± -
1 PLC ± -
2 PLC ± 0.25 [.010]
3 PLC ± -
4 PLC ± -
ANGLES ± -

MATERIAL: BRASS
FINISH: SEE TABLE

DWN JR RUTH	12DEC00	
CHK MS FEHER	12DEC00	
APVD G PORTA	12DEC00	
PRODUCT SPEC —		
APPLICATION SPEC —		
WEIGHT —		

TE Connectivity

NAME: TAB, FASTON, PC BOARD, 2.79 [.110] SERIES

SIZE	CAGE CODE	DRAWING NO	RESTRICTED TO
A3	00779	C-62395	—

CUSTOMER DRAWING | SCALE 8:1 | SHEET 1 OF 1 | REV U

1470-19 (3/11)