PART NAME	UTILIBOX (STYLE H)	PART No.	CU-1470-MB TO CU-1474-MB

MATERIAL: ABS THERMOPLASTIC (FLAMMABILITY RATING OF 94-V0 AT 0.070" THICKNESS AND CONTINUOUS USE TEMPERATURE OF 70° C.)

FINISH:
BODY - OUTSIDE SURFACES ARE TEXTURED FINISH
COVER - VERTICAL OUTSIDE SURFACES ARE TEXTURED
REMAINDER OF PART IS SMOOTH.

COLOR: BLACK

LENGTH AND WIDTH DIMENSIONS ARE TAKEN FROM CLOSED END OF THE BOX. DIMENSIONS INCREASE SLIGHTLY AT OPEN END DUE TO TAPER.

NOTE: ALL DIMENSIONS HAVE ±0.010 TOLERANCE UNLESS OTHERWISE SPECIFIED.

FOUR (4) #4 x 1.000 LG. SELF THREADING SCREWS WITH HI/LOW THREADS ARE SUPPLIED FOR MOUNTING COVER.

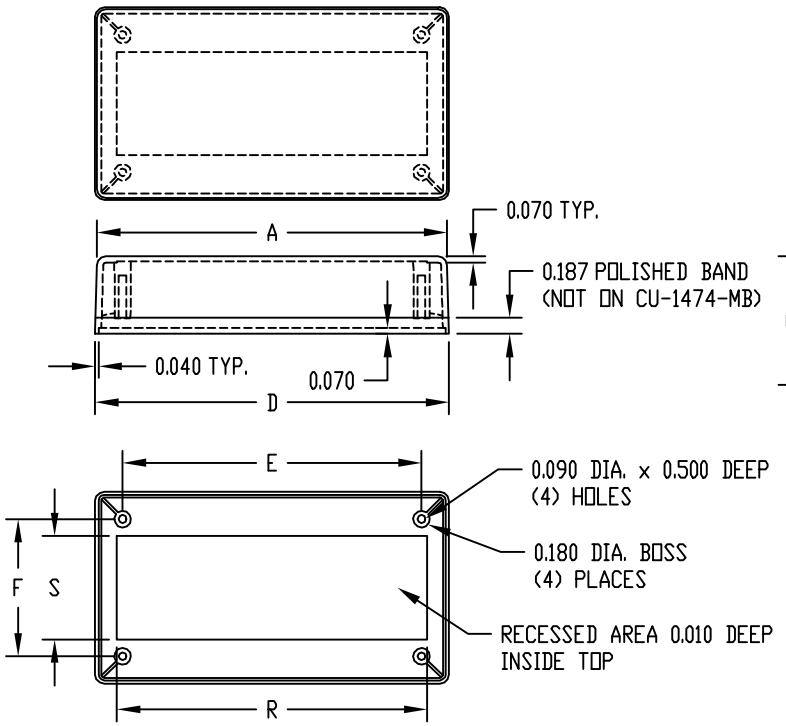

BODY

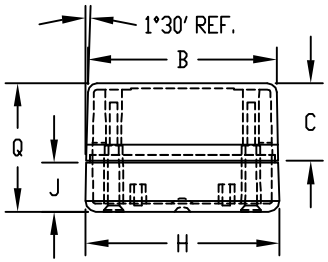

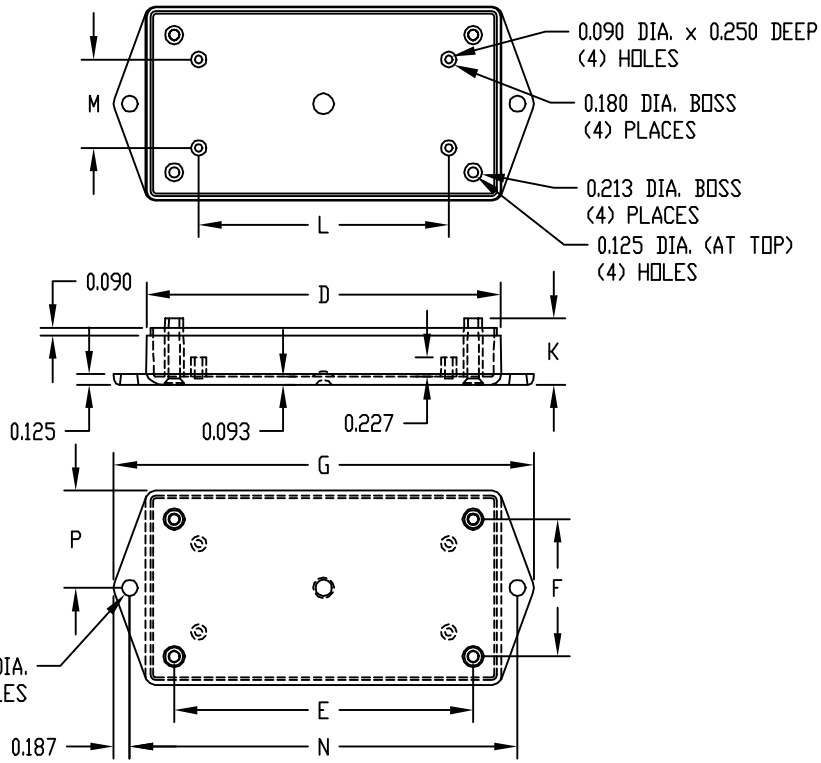

COVER

PART No.	A	B	C	D	E	F	G	H	J	K	L	M	N	P	Q	R	S
CU-1470-MB	3.000	2.000	0.900	3.079	2.616	1.616	3.875	2.102	0.570	0.770	2.080	1.080	3.500	1.051	1.490	-----	-----
CU-1471-MB	3.000	2.000	0.900	3.079	2.616	1.616	3.875	2.102	0.570	0.770	2.080	1.080	3.500	1.051	2.090	-----	-----
CU-1472-MB	3.000	3.000	1.500	3.079	2.616	2.616	3.875	3.102	0.570	0.770	2.125	2.125	3.500	1.551	2.090	-----	-----
CU-1473-MB	4.000	1.750	1.000	4.052	3.589	1.339	4.875	1.809	0.250	0.450	3.088	0.828	4.500	0.904	1.270	-----	-----
CU-1474-MB	4.000	2.188	0.900	4.105	3.469	1.594	4.875	2.253	0.570	0.740	2.902	1.026	4.500	1.127	1.490	3.603	1.200

Mouser Electronics

Authorized Distributor

Click to View Pricing, Inventory, Delivery & Lifecycle Information:

Bud Industries:

CU-1470-MB CU-1472-MB CU-1473-MB CU-1474-MB CU-1471-MB