PRODUCT NO.	70243–101LF
	70243–111LF

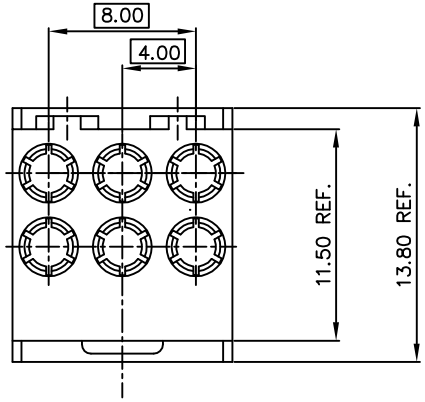

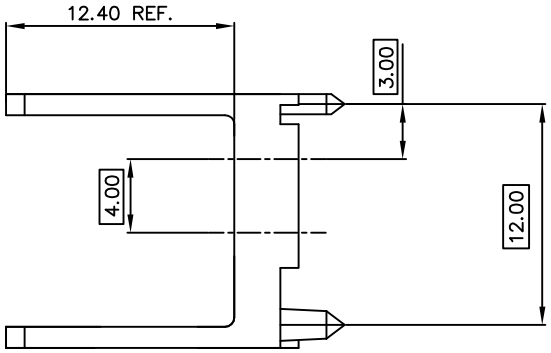

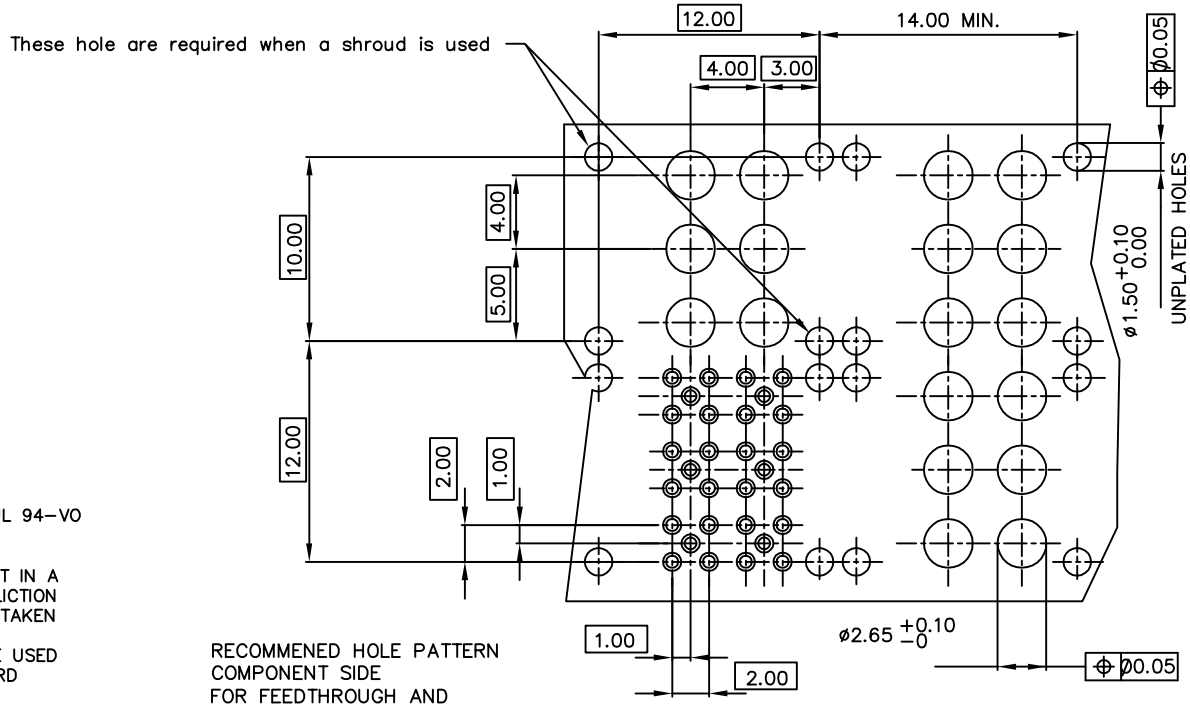

RECOMMENED HOLE PATTERN
COMPONENT SIDE
FOR FEEDTHROUGH AND
SOLDER TO BOARD.

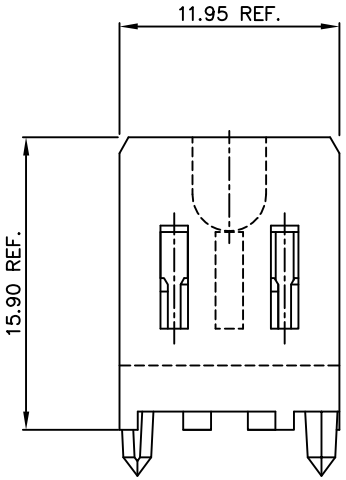

NOTE:
1) MATERIAL:
LIQUID CRYSTAL POLYMER
30% GLASS.
FLAME RETARDANT ACC. UL 94–VO
COLOR NATURAL.

2) WHEN USING THIS PRODUCT IN A STRAIGHT TO BOARD APPLICTION THE FOLLOWING MUST BE TAKEN INTO ACCOUNT.
–101LF HOUSING IS TO BE USED FOR THE SOLDER TO BOARD INSERT 88980–00Z.
–111LF HOUSING IS TO BE USED FOR THE PRESS–FIT TO BOARD INSERT 88978–001.

3) THIS PRODUCT WITH "LF" SUFFIX MEETS EURPOEAN UNIONDIRECTIVES AND OTHER COUNTRY REGULATIONS AS DESCRIBED IN GS –22–008.

4) THE HOUSING WILL WITHSTAND EXPROSURE TO 260 DEGREE PEAK TEMPERATURE FOR 10 SECONDS IN A WAVE SOLDER APPLICATION WITH A 1.6mm MINIMUM THICK CIRCUIT BOARD.

ltr	ecn no	dr	date
A	H10290	DAN	910912
B	H10402	DAN	911229
C	H20755	DAN	921124
D	H40801	RVI	941208
E	H90489	HME	990816
F	DG05–0357	CLu	050927

mat'l. code SEE NOTE 1.
tolerances unless otherwise specified: linear; angles
dr D Andrews 910912
eng D Andrews 941208
chr A v Zanten 910912
appd H v Woensel 910912
CUSTOMER COPY
projection
mm
scale 5:1
FCI ELECTRONICS www.fcicconnect.com
title MINI COAX S.T. MALE CONNECTOR
product family VETRAL(tm)
code 213
size A2
dwg no 70243
sheet 1 of 1
sheet index revision F
sheet 1

form: A2

PDM: Rev.F STATUS: Released Printed: May 19, 2011

Tous droits strictement reservés. Reproduction ou communication a des tiers interdites sauf autorisation écrite du propriétaire. Propriété de F C I b.v. ©F C I b.v.
All rights strictly reserved. Reproduction or issue to third parties in any form whatsoever is not permitted without written authority from the proprietor. Property of F C I b.v. ©F C I b.v.