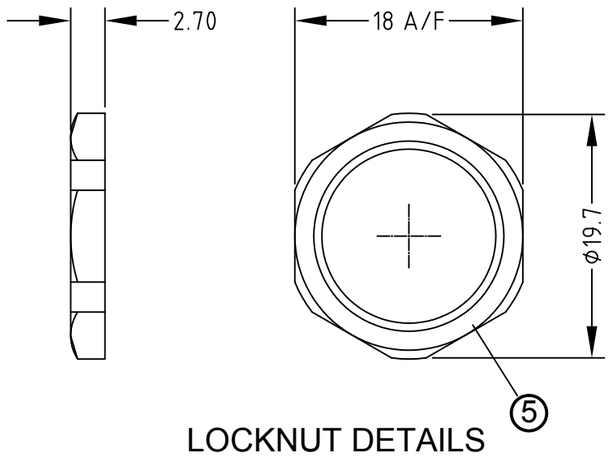

LOCKNUT DETAILS

DRILLING DRAWING
FOR PC-BOARD
8-POL

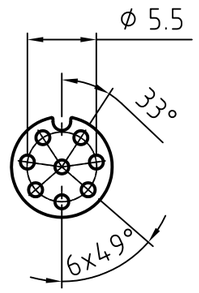

3 TO 5-POL

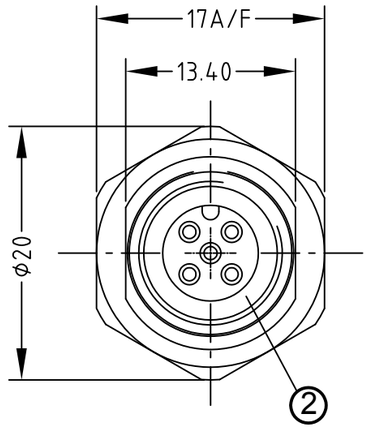

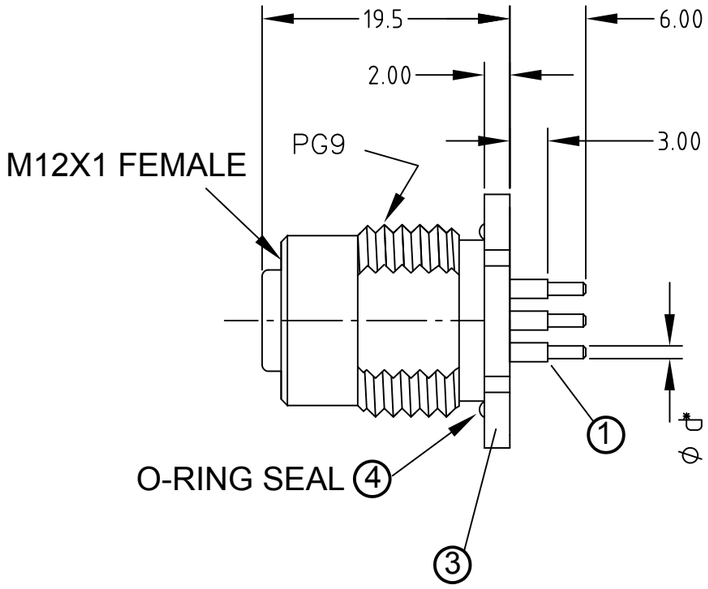

Ø d*
3-5 pol.: 1.0
8 pol.: 0.8

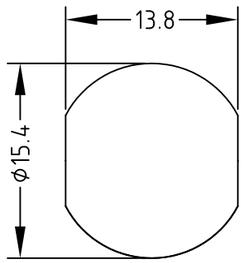

PANEL CUT OUT
MAX. PANEL THICKNESS-4.5mm

POL	MATERIAL NUMBER	ENGINEERING NUMBER
3	1200705203	8R3J400013
4	1200110237	8R4J400013
5	1200110238	8R5J400013
8	1200705210	8R8J400013

CONNECTOR SPECIFICATION:

VOLTAGE RATING	3-5P 250V / 8P 30AC/36DC
AMPERAGE RATING	4 AMPS/2A
PROTECTION	IP68
ASSEMBLY IS RoHS COMPLIANT	

ITEM	COMPONENT	MATERIAL	FINISH
5	LOCKNUT	BRASS	BRIGHT NICKEL PLATED
4	O-RING	VITON	BLACK
3	RECEPTACLE SHELLS	BRASS	BRIGHT NICKEL PLATED
2	INSERT	PUR (30% GLASS FILLED)	-
1	CONTACT	BRASS (CuZn36)	GOLD OVER NICKEL

FEMALE FACE VIEW

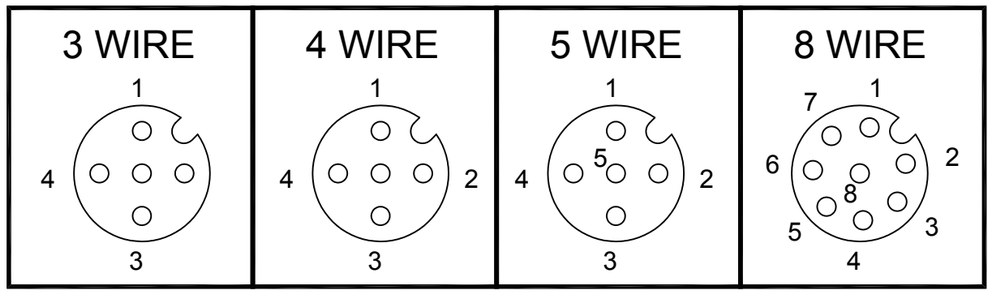

DESCRIPTION
EC NO: WEU2010-0391
DRWN: LSTEMMLE 26.02.10
CH'KD: NS ----
APPR: NSTAUDIG 2010/03/03
DESCRIPTION
REV 2

QUALITY SYMBOLS
▼ = 0
Ⓒ = 0

GENERAL TOLERANCES (UNLESS SPECIFIED)	mm	INCH
4 PLACES	±---	±---
3 PLACES	±---	±---
2 PLACES	±---	±.01
1 PLACE	±0.3	±---
ANGULAR ± --- °		

DRAFT WHERE APPLICABLE MUST REMAIN WITHIN DIMENSIONS

DIMENSION STYLE: MM
SCALE: 1:1
DESIGN UNITS: METRIC
THIRD ANGLE PROJECTION

DRAWN BY: LSTEMMLE DATE: 2010/02/15
CHECKED BY: FP DATE: 2010/03/01
APPROVED BY: NSTAUDIG DATE: 2010/03/03

MICRO CHANGE
M12-3-8P-FE-REC-PCB
BACK PANEL MOUNT

molex MOLEX INCORPORATED

MATERIAL NO.: SEE TABLE
DOCUMENT NO.: SD-120070-013
SHEET NO.: 1 OF 1
SIZE: A3

THIS DRAWING CONTAINS INFORMATION THAT IS PROPRIETARY TO MOLEX INCORPORATED AND SHOULD NOT BE USED WITHOUT WRITTEN PERMISSION