MICRO SWITCH
A DIVISION OF MINNEAPOLIS-HONEYWELL REGULATOR COMPANY
FREEPORT, ILLINOIS
FED. MFR. CODE 91929

SWITCH – BASIC

CATALOG LISTING
4HS46

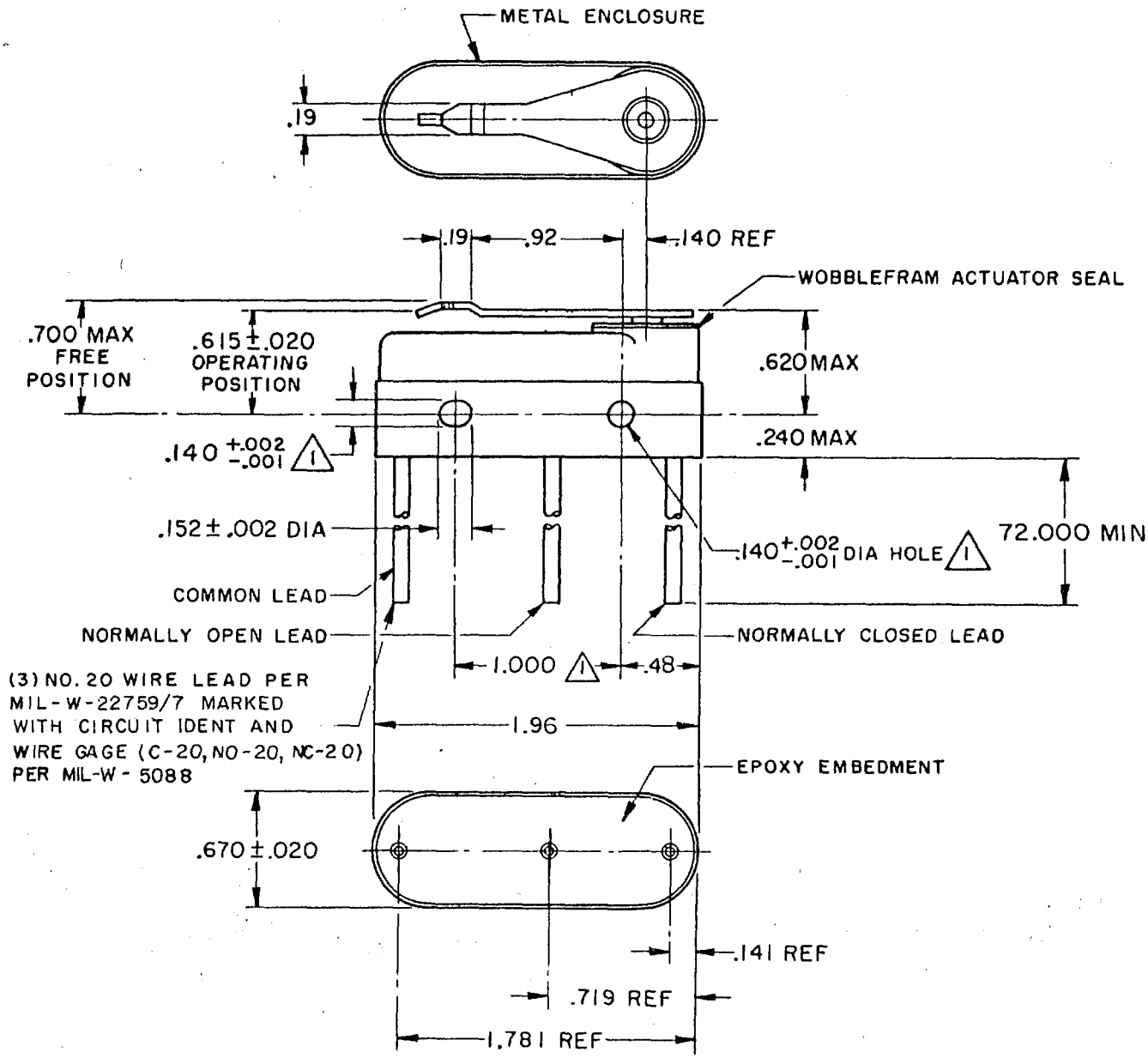

NOTE –
1 - MOUNTING HOLES WILL ACCEPT PINS OR SCREWS OF .139 MAX DIA ON 1.000±.002 CENTERS

2 - FOR USE IN AMBIENT TEMPERATURE RANGE FROM MINUS 65° F TO PLUS 250° F
3 - WEIGHT OF SWITCH ONLY IS 1.5 OZ MAX WEIGHT OF CONDUCTOR GROUP ONLY IS 0.4 OZ MAX PER FOOT

THIS DRAWING COVERS A PROPRIETARY ITEM AND IS THE PROPERTY OF MICRO SWITCH, A DIVISION OF MINNEAPOLIS-HONEYWELL REGULATOR CO. THIS DRAWING IS NOT TO BE COPIED OR USED WITHOUT THE APPROVAL OF MICRO SWITCH.

CHARACTERISTICS

OPERATING FORCE – – – – – – 10 - 22 OZ
RELEASE FORCE – – – – – – – – 4 OZ MIN
PRETRAVEL – – – – – – – – – – .065 MAX
DIFFERENTIAL TRAVEL – – – – .020 MAX
OVERTRAVEL – – – – – – – – – – .010 MIN

ELECTRICAL DATA (TENTATIVE)

CONTACT ARRANGEMENT
S P D T

LINE VOLTAGE	INDUCTIVE LOAD	RESISTIVE LOAD
28 VDC	8 AMP	25 AMP
	(SEA LEVEL – 100,000 FT)	
125 VAC	1 AMP	.5 AMP
	(SEA LEVEL – 70,000 FT)	

SCALE FULL
DO NOT SCALE PRINT

UNLESS OTHERWISE SPECIFIED
DIMENSIONS ARE IN INCHES
TOLERANCES ARE:

ONE PLACE	(.0)	±.030
TWO PLACE	(.00)	±.015
THREE PLACE	(.000)	±.005
ANGLES		±

WEIGHT 3

(M) 4HS46 ISSUE 3
REPLACES
4HS46 PAGE 1 OF 1
RELEASE NO.
M
DRAWING NUMBER
ISSUE

REVISIONS

A	C015761	OMW 27 APR 61	6 MAY 61
B	C030206	DBW 13 MAR 72	REF
C	C032089	SRH 1 JUN 73	
D	CO 44646-C	CJH 9 JAN 79	CHECK
E	C055162-B	KEW 11 OCT 84	6 MAY 61
F	C061043	TSK 29 AUG 88	
G	C075625	JDB 9 JULY 93	DAW
H	CO-94122	TSM 12 MAR 99	CHECK

DRAWN OMW 27 APR 61

F0-50378
FORMTEK