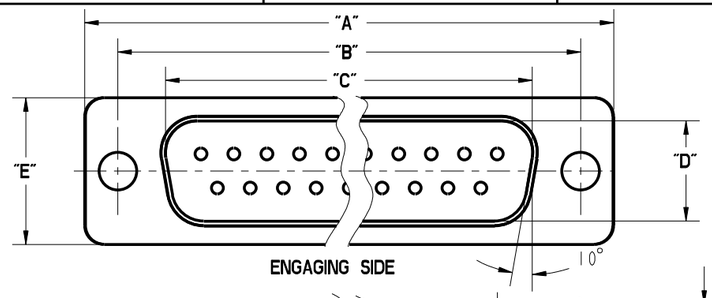

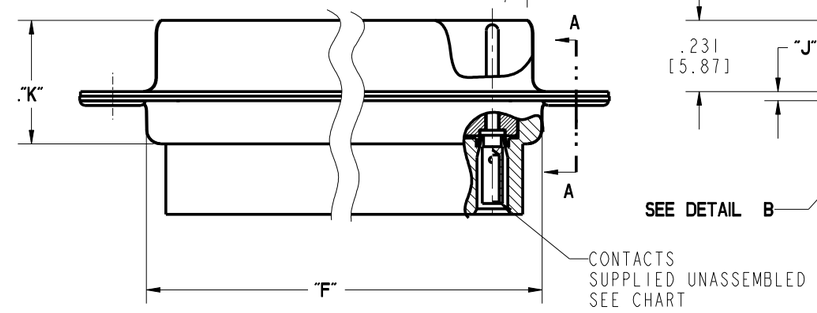

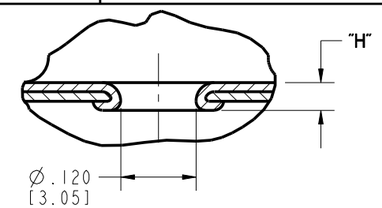

DETAIL B
(2-PLACES)

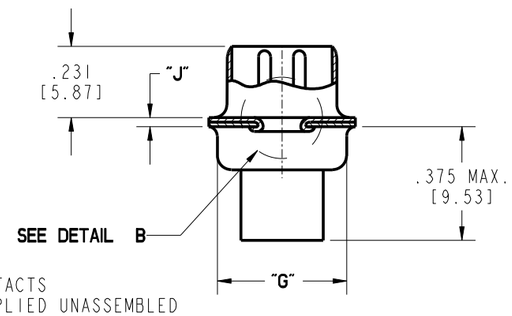

SECTION A-A

NOTES:

1. SPECIFICATIONS:

ELECTRICAL:
WITHSTANDING VOLTAGE: MINIMUM 1000 V RMS @ SEA LEVEL
INSULATION RESISTANCE: INITIAL 5000 MEGOHMS MAXIMUM,
1000 MEGOHMS MIN. AFTER ENVIRONMENTAL TESTING.
CONTACT RATING: 5 AMPS
CONTACT RESISTANCE: 2.7 MILLIOHMS MAX.

MATERIALS:

INSULATOR: BLACK UL94V-O RATED GLASS FILLED NYLON
CONTACT(030-1952-000): COPPER ALLOY
CONTACT AREA PLATING: GOLD OVER NICKEL,
CONNECTOR SHELL: STEEL, PLATING ZINC WITH CLEAR CHROMATE.

ENVIRONMENTAL:
OPERATING TEMPERATURE: -65°C TO +125°C

TERMINATION:
CRIMP WILL ACCOMODATE # 20 TO 28 AWG WIRE.
TERMINATION-TOOLS:
CRIMP TOOL: M22520/2-01
INSERTION/EXTRACTION TOOL: CIET-20-HDB
POSITIONER: EP-580

2. DIMENSIONS IN [ ] ARE IN MILLIMETERS.

NUMBER OF POSITIONS	SELECTIVE GOLD FLASH PLATING (.120" [3.05] MTG. HOLES)		CONTACTS	DIMENSION										FRONT MOUNTING HOLE DIMENSIONS		REAR MOUNTING HOLE DIMENSIONS	
	PART NO.	FACTORY NO.		"A"	"B"	"C"	"D"	"E"	"F"	"G"	"H"	"J"	"K"	"X"	"Y"	"X"	"Y"
9	DEUH-9P	702 03 09 001	INCLUDED	1.213 [30.81]	.984 [24.99]	.697 [17.70]	.360 [9.14]	.494 [12.55]	.759 [19.28]	.422 [10.72]	.045 [1.14]	.030 [.76]	.422 [10.72]	.874 [22.20]	.513 [13.03]	.806 [20.47]	.449 [11.40]
	DEUH-9P-FO	702 03 09 005	NOT INCLUDED														
15	DAUH-15P	702 03 15 001	INCLUDED	1.541 [39.14]	1.312 [33.32]	1.025 [26.03]			1.083 [27.51]					1.202 [30.53]		1.134 [28.80]	
	DAUH-15P-FO	702 03 15 005	NOT INCLUDED														
25	DBUH-25P	702 03 25 001	INCLUDED	2.088 53.04]	1.852 [47.04]	1.583 [40.21]	.378 [9.60]		1.629 [41.38]			.039 [.99]	.426 [10.82]	1.743 [44.27]		1.674 [42.52]	
	DBUH-25P-FO	702 03 25 005	NOT INCLUDED														
37	DCUH-37P	702 03 37 001	INCLUDED	2.729 [69.32]	2.500 [64.50]	2.231 [56.67]			2.272 [57.71]		.060 [1.52]			2.391 [60.73]		2.326 [59.08]	
	DCUH-37P-FO	702 03 37 005	NOT INCLUDED														
50	DDUH-50P	702 03 50 001	INCLUDED	2.635 [66.93]	2.406 [61.11]	2.127 54.02]	.484 [12.29]	.605 [15.37]	2.178 [55.32]	.534 [13.56				2.297 [58.34]	.623 [15.82]	2.218 [56.34]	.555 [14.10]
	DDUH-50P-FO	702 03 50 005	NOT INCLUDED														

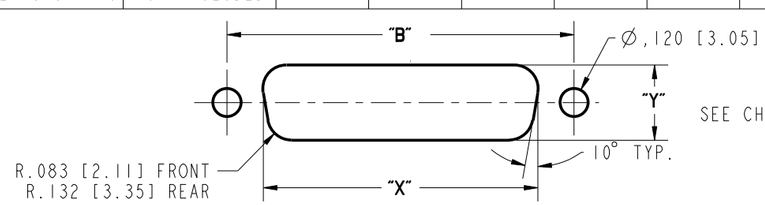

RECOMENDED MTG.HOLE LAYOUT
SEE CHART FOR FRONT AND REAR MTG.DIMENSIONS

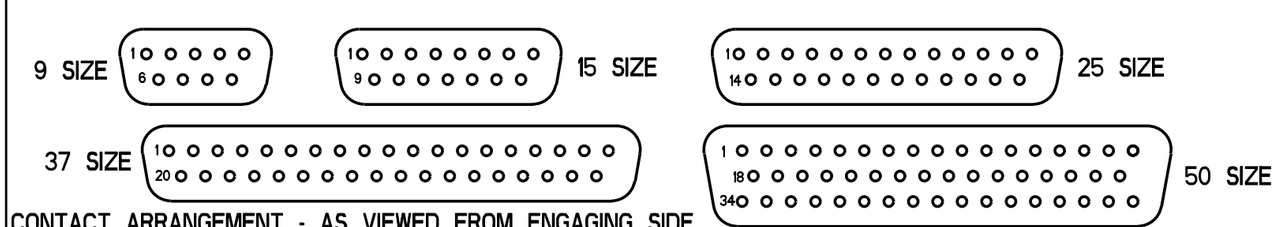

CONTACT ARRANGEMENT - AS VIEWED FROM ENGAGING SIDE

DRAWING REVISIONS			
REV	DOCUMENT	APP	DATE
A	DO 05-11146	AKB	01/07/06
B	ECN 06E296		

ROHS COMPLIANT

UNITS ENGLISH	PRO/E	Cinch	MODELED BY: V.SKUZA; 1700 FINLEY RD LOMBARD, IL. 60148
DO NOT SCALE DRAWING	DRAWN BY V.SKUZA	DATE 06/17/05	TITLE D*U SERIES CRIMP & POKE CONNECTOR PLUG ASS'Y(.120"HOLES)
[redacted]	DESIGN ENGINEER A.BALI	06/17/05	MATERIAL / CONTROL SPEC NUMBER
	DESIGN ENGINEERING MGR. A.SHAH	07/09/05	MATERIAL SPEC NUMBER / FINISH / PROJECT NUMBER C14740
THIS DOCUMENT IS THE PROPERTY OF CINCH. NEITHER THIS DOCUMENT NOR ANY OF THE INFORMATION CONTAINED IN IT MAY BE DUPLICATED OR DISCLOSED WITHOUT PRIOR WRITTEN CONSENT OF CINCH.	MFG. ENGINEERING J.OCEGUERA	07/07/05	CAD FILE NUMBER DXUHXXP / DRAWING NUMBER D*UH-XXP
	QUALITY ASSURANCE A. VAZQUEZ	07/06/05	CAGE IDENT NO. 71785 / SIZE B / SCALE 1:1 / SHEET 1 OF 1