THIS DRAWING IS UNPUBLISHED. RELEASED FOR PUBLICATION -.- .
© COPYRIGHT - BY TYCO ELECTRONICS CORPORATION. ALL RIGHTS RESERVED.

| LOC | DIST |
|---|---|
| CM | 00 |

REVISIONS

| P | LTR | DESCRIPTION | DATE | DWN | APVD |
|---|---|---|---|---|---|
| | E1 | REVISED PER ECO-07-001393 | 19JAN07 | KW | DB |

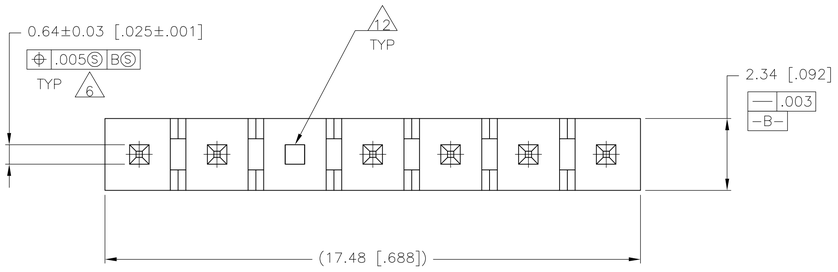


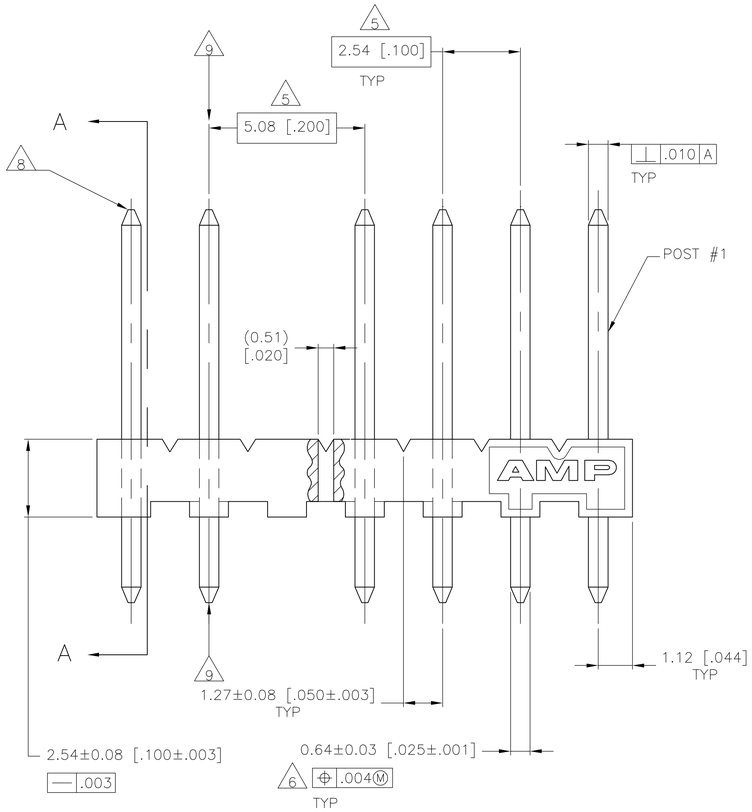


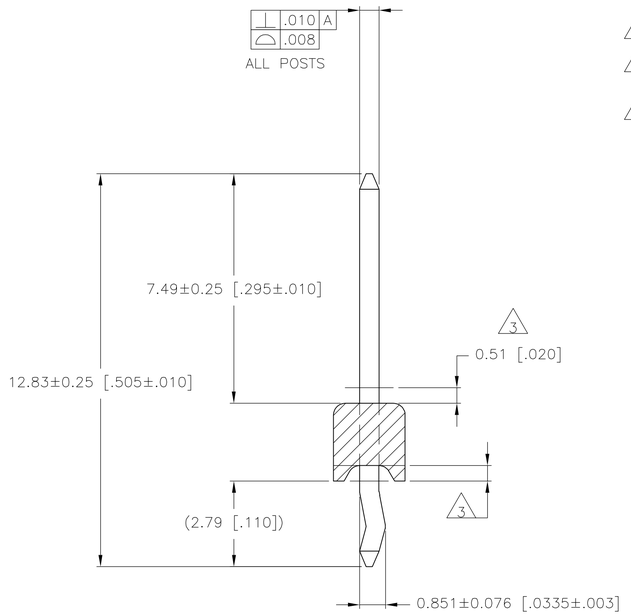


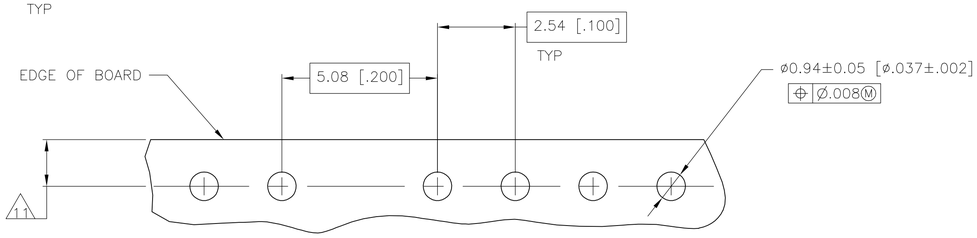


RECOMMENDED MOUNTING HOLE PATTERN
FOR 1.60 [.063] THICK P.C. BOARD 10

1. MATERIAL:
   BASE: THERMOPLASTIC POLYESTER,UL 94V-0 (NATURAL).
   POST: COPPER ALLOY ( TIN OR TIN LEAD-PLATED, .000150" MIN THK
   SEE PART NUMBER TABLE FOR DETAILS )
2. AMP LOGO MAY OR MAY NOT APPEAR ON MOLDING HOUSING.
3. PARTS MUST COMPLY WITH AMP SOLDERABILITY SPEC 109-11-2.
4. PLASTIC AROUND POST PERMISSIBLE IN THIS AREA ONLY.
5. DIMENSION APPLIES WHEN HEADER IS HELD FLAT.
6. MEASURED AT -A-
7. COORDINATE DIMENSION APPLIES FROM CENTER OF ACTUAL FEATURE.
8. RADIUS AT TIP PERMITTED, BOTH ENDS.
9. POST MUST WITHSTAND 3.0 LB (13 NEWTONS) MIN AXIAL FORCE IN BOTH DIRECTIONS WITHOUT DISLODGING.
10. SOLDER SIDE OF BOARD IS SHOWN.
11. DIMENSION SHOULD BE .060 MIN WHEN MATING WITH A MTA-100 CONNECTOR ASSEMBLY OR A CST-100 CONNECTOR.
12. HOLE IN OMITTED POST LOCATION MAY NOT BE PRESENT.

3-644743-1 SHOWN

| | | | | |
|---|---|---|---|---|
| | TIN | 1,7 | 2 | 3-644743-2 |
| | | 1,7 | 5 | 3-644743-1 |
| SUPERSEDED BY 3-644743-2 | TIN-LEAD | 1,7 | 2 | 644743-2 |
| SUPERSEDED BY 3-644743-1 | | 1,7 | 5 | 644743-1 |
| | FINISH | RETENTIVE POSITIONS | POST NO. OMITTED | PART NUMBER |

| | | | |
|---|---|---|---|
| .0335 | 0.851 | .688 | 17.48 |
| .025 | 0.64 | .505 | 12.83 |
| .020 | 0.51 | .295 | 7.49 |
| .010 | 0.25 | .200 | 5.08 |
| .008 | 0.20 | .110 | 2.79 |
| .005 | 0.13 | .100 | 2.54 |
| .004 | 0.10 | .092 | 2.34 |
| .0030 | 0.076 | .063 | 1.60 |
| .003 | 0.08 | .060 | 1.52 |
| .002 | 0.05 | .050 | 1.27 |
| .001 | 0.03 | .044 | 1.12 |
| .000150 | 0.00381 | .037 | 0.94 |
| IN | MM | IN | MM |

CONVERSION TABLE

METRIC

THIS DRAWING IS A CONTROLLED DOCUMENT.

DIMENSIONS: mm [INCHES]

TOLERANCES UNLESS OTHERWISE SPECIFIED:
0 PLC ± -
1 PLC ± -
2 PLC ± -
3 PLC ± -
4 PLC ± -
ANGLES ± -

MATERIAL 1 FINISH 1

DWN B. VISWESWARA 15JULY2005
CHK D. BOSSI 15JULY2005
APVD D. BOSSI 15JULY2005

PRODUCT SPEC —
APPLICATION SPEC —
WEIGHT —

Tyco Electronics Corporation
Harrisburg, Pa 17105-3608

NAME MTA-100 HEADER ASSEMBLY,NARROW 0.64 [.025] SQUARE STRAIGHT POST W/RETENTIVE LEGS, TIN PLATED, 7 POSITION, W/OMITTED POST

SIZE A1 | CAGE CODE 00779 | DRAWING NO C-644743 | RESTRICTED TO —

CUSTOMER DRAWING | SCALE 10:1 | SHEET 1 OF 1 | REV E1