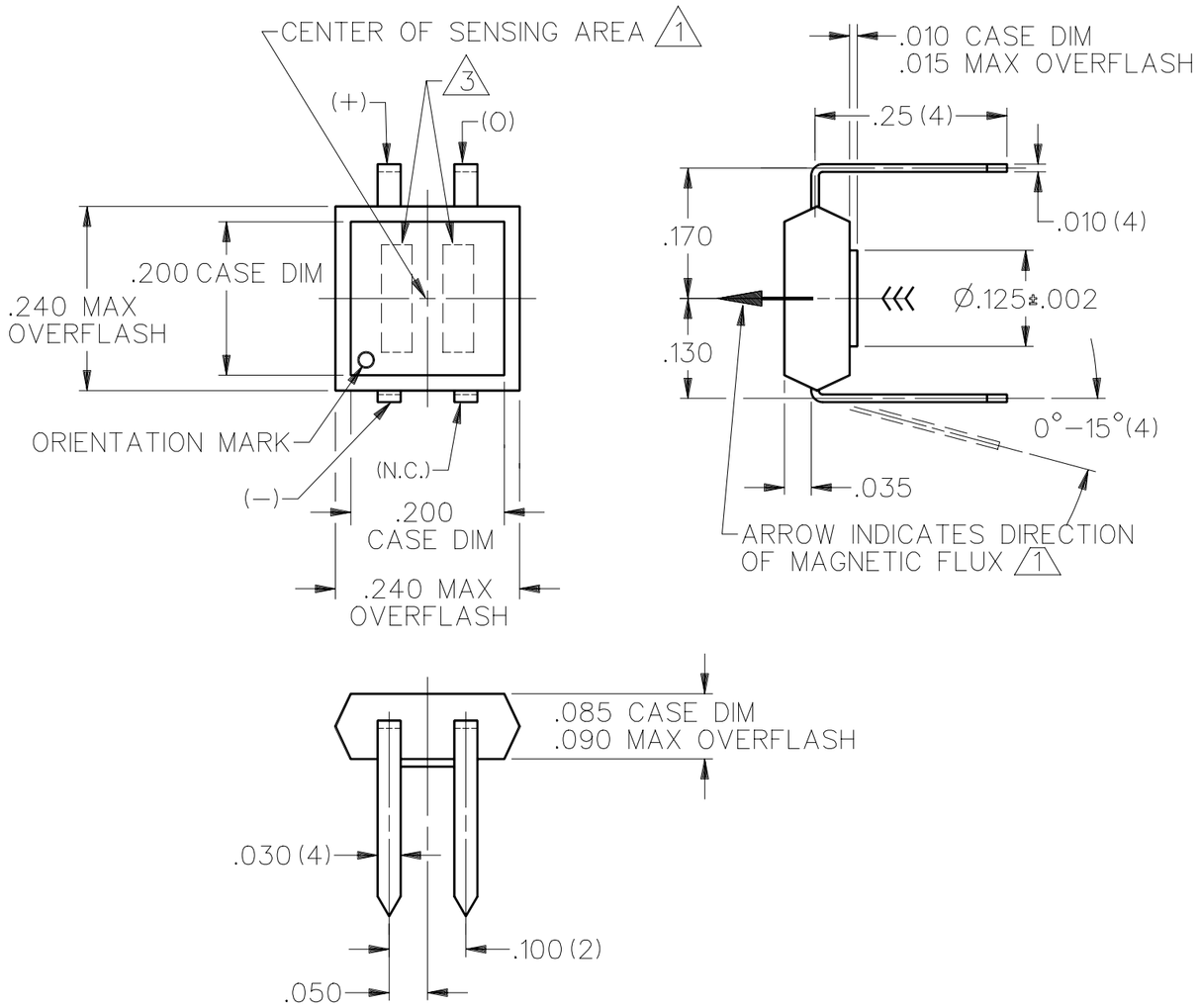

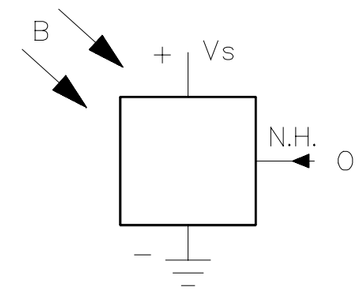

SWITCH SYMBOL

MAGNETIC CHARACTERISTICS 2 4

TEMP. RANGE	25°C	−20°C TO 85°C	−40°C TO 125°C
OPERATE MAX	150	220	240
OPERATE MIN	90	---	---
RELEASE MIN	50	50	50
DIFF MIN	10	8	8

ABSOLUTE MAXIMUM RATING

SUPPLY VOLTAGE (Vs) 6	−28 TO +28 VDC
VOLTAGE EXTERNALLY APPLIED TO OUTPUT	+28 VDC MAX WITH SWITCH IN "OFF" CONDITION ONLY −0.5 V WITH SWITCH IN "OFF" OR "ON" CONDITION
LOAD ON OUTPUT	20mA
TEMPERATURE	−40°C TO +150°C
MAGNETIC FLUX	NO LIMIT, THE CIRCUIT CANNOT BE DAMAGED BY MAGNETIC OVERDRIVE

ELECTRICAL CHARACTERISTICS

	MIN	TYP	MAX	REMARKS
SUPPLY CURRENT 4			18mA	PLUS LOAD CURRENT Vs=4.5−24 VOLTS 4
OUTPUT VOLTAGE (OPERATED) 4			0.4	SINKING 10mA
OUTPUT LEAKAGE CURRENT 4 (RELEASED)			10μA	LEAKAGE INTO SWITCH OUTPUT
OUTPUT SWITCHING TIME (SINKING 10mA) 4				
RISE TIME (10% TO 90%)		0.2μS	1.5μS	10% TO 90%
FALL TIME (90% TO 10%)		0.5μS	1.5μS	90% TO 10%

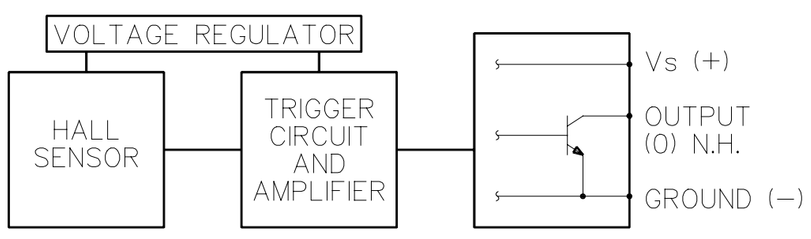

BLOCK DIAGRAM SHOWING CURRENT SINKING OUTPUT

NOTES

1. TO ACTUATE THE DEVICE, THE SOUTH POLE OF THE MAGNET OR MAGNETIC FLUX GENERATOR MUST BE PRESENTED TO THE CENTER OF THE FRONT SURFACE OF THE DEVICE. (THIS ASSUMES THE CONVENTION THAT THE DIRECTION OF THE EXTERNAL FLUX OF A MAGNET IS FROM THE NORTH TO THE SOUTH POLE OF THE MAGNET)
2. THE MAGNETIC FIELD STRENGTH (GAUSS) REQUIRED TO CAUSE THE SWITCH TO CHANGE STATE (OPERATE AND RELEASE) WILL BE AS SPECIFIED IN THE MAGNETIC CHARACTERISTICS. TO TEST THE SWITCH AGAINST THE SPECIFIED MAGNETIC CHARACTERISTICS, THE THE SWITCH MUST BE PLACED IN A UNIFORM MAGNETIC FIELD
3. CATALOG LISTING AND LOT NO. WILL BE STAMPED ON THE PACKAGE
4. AT SUPPLY VOLTAGE OF 4.5 TO 24 VDC AND OVER THE TEMPERATURE RANGE SPECIFIED
5. AT 24±2°C
6. Vs IS THE UNREGULATED SUPPLY VOLTAGE

THIS DRAWING COVERS A PROPRIETARY ITEM AND IS THE PROPERTY OF MICRO SWITCH. A DIVISION OF HONEYWELL. THIS DRAWING IS NOT TO BE COPIED OR USED WITHOUT THE APPROVAL OF MICRO SWITCH.

MICRO SWITCH
a Honeywell Division
FED. MFG. CODE 91929

SOLID STATE SWITCH
MAGNETICALLY OPERATED

CATALOG LISTING
64SS4

THIRD ANGLE PROJECTION

SCALE 5 : 1

DO NOT SCALE PRINT

UNLESS OTHERWISE SPECIFIED TOLERANCES ARE

ONE PLACE	(.0)	±.030
TWO PLACES	(.00)	±.015
THREE PLACES	(.000)	±.005
ANGLES		±

WEIGHT

64SS4 | M | PR−18762 | REPLACES X90432−SS | RELEASE NO. | DRAWING NUMBER | ISSUE 1 | CHECK | REVISIONS | CHECK | CHECK | CHECK | DDM/CAD | DRAWN | J A S 17DEC90