THIS DRAWING IS UNPUBLISHED. RELEASED FOR PUBLICATION -,- .
© COPYRIGHT - By - ALL RIGHTS RESERVED.

LOC	DIST
G	02

REVISIONS

P	LTR	DESCRIPTION	DATE	DWN	APVD
	G	REVISED PER ECO-14-015277	27FEB2015	NK	DR

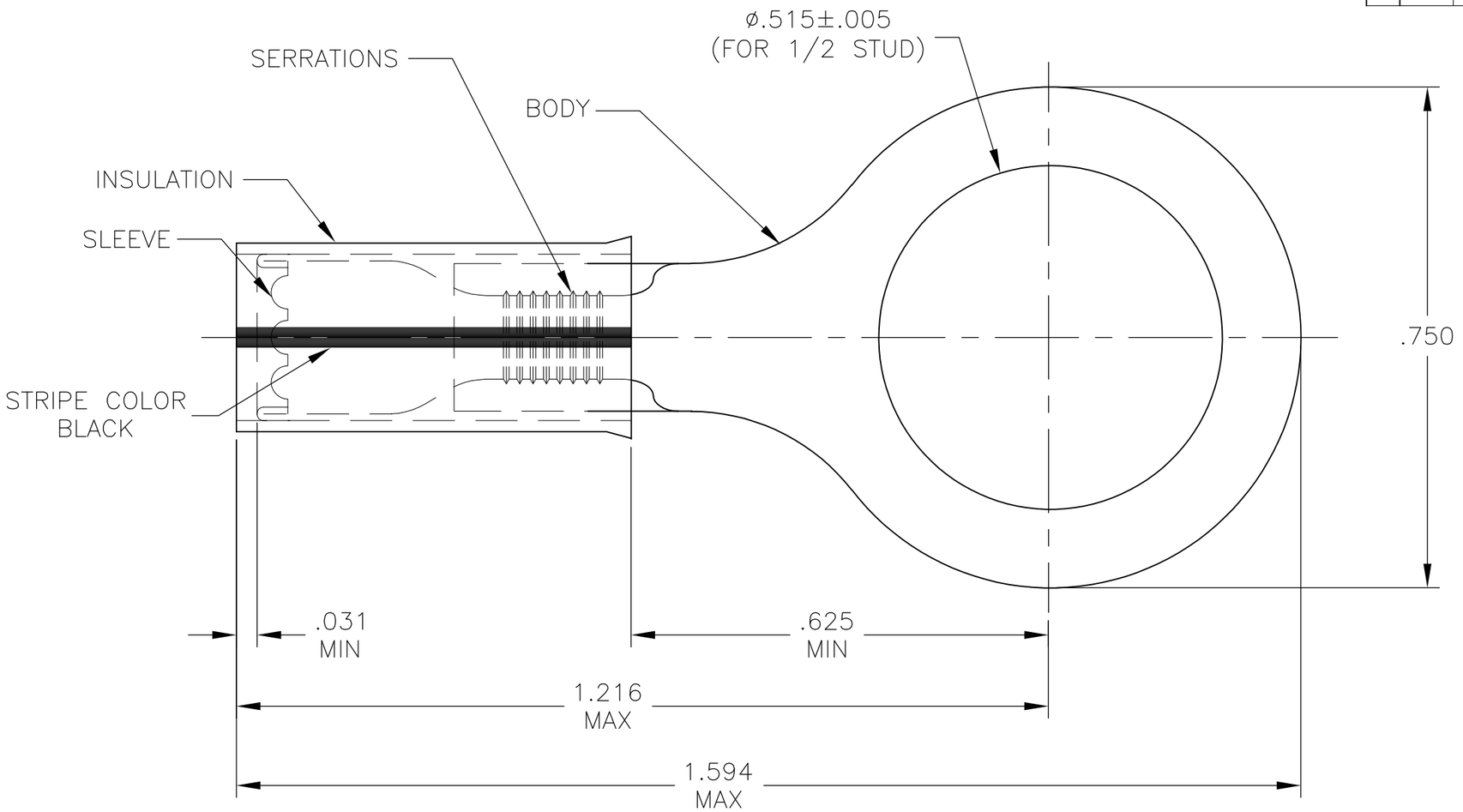

1. STAMP AMP 16-14 HD* APPROX AS SHOWN.
2. FOR .150 TO .250 WIRE INSULATION DIA
3. TONGUE MATERIAL THK. = .048±.002

QTY	MATERIAL & FINISH	DESCRIPTION	PART NO
1	BODY: COPPER (ASTM B152) TIN PL (ASTM B 545) SLEEVE: COPPER (ASTM B152) INSULATION: YELLOW NYLON	WIRE TERMINAL	35316

THIS DRAWING IS A CONTROLLED DOCUMENT.

DIMENSIONS: INCHES

TOLERANCES UNLESS OTHERWISE SPECIFIED:

0 PLC	± -
1 PLC	± -
2 PLC	± -
3 PLC	± .008
4 PLC	± -
ANGLES	± 5°

MATERIAL: SEE TABLE

FINISH: -

DWN	NAGALAKSHMI K	04-17-70
CHK		04-21-70
APVD		04-22-70
PRODUCT SPEC	—	
APPLICATION SPEC	—	
WEIGHT	—	

CUSTOMER DRAWING

TE Connectivity

NAME: WIRE TERMINIAL P.I.D.G RING TONGUE
WIRE SIZE: 16-14 HD

SIZE	CAGE CODE	DRAWING NO	RESTRICTED TO
A3	00779	C-35316	—

SCALE	SHEET	REV
5:1	1 OF 1	G