THIS DRAWING IS UNPUBLISHED. RELEASED FOR PUBLICATION -,- .
© COPYRIGHT - By - ALL RIGHTS RESERVED.

LOC	DIST
AF	50

REVISIONS

P	LTR	DESCRIPTION	DATE	DWN	APVD
	F	REVISED PER ECR-12-013518	23NOV2012	KH	PD

1 SUPPLIED IN LOOSE PIECE OR STRIP FORM, SEE DASH NUMBERS.

2 WIRE SIZE [#22-#18] AWG.

3 MATING TAB IS 0.25±0.025 [.010±.001] THK.

4 INSULATION RANGE IS 1.27-2.16 [.050-.085] DIA.

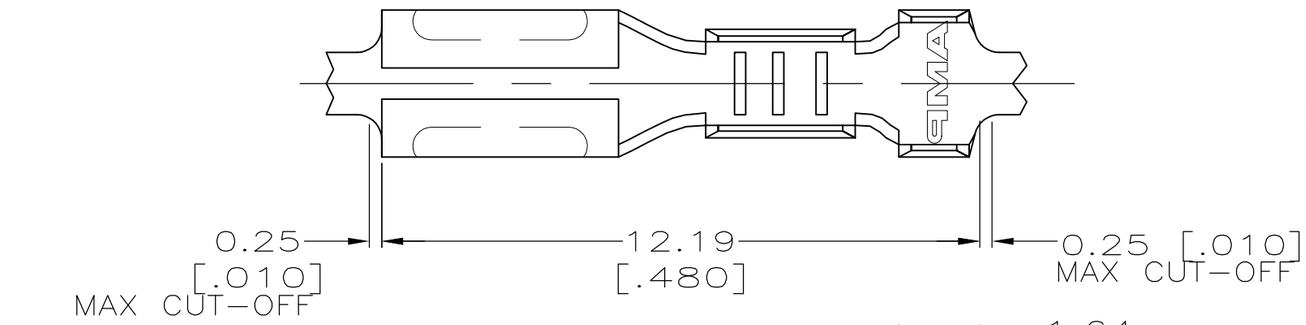

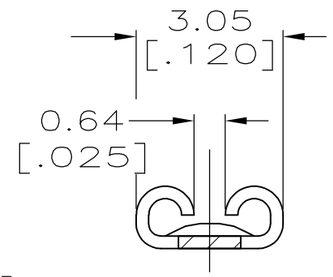

VIEW A-A

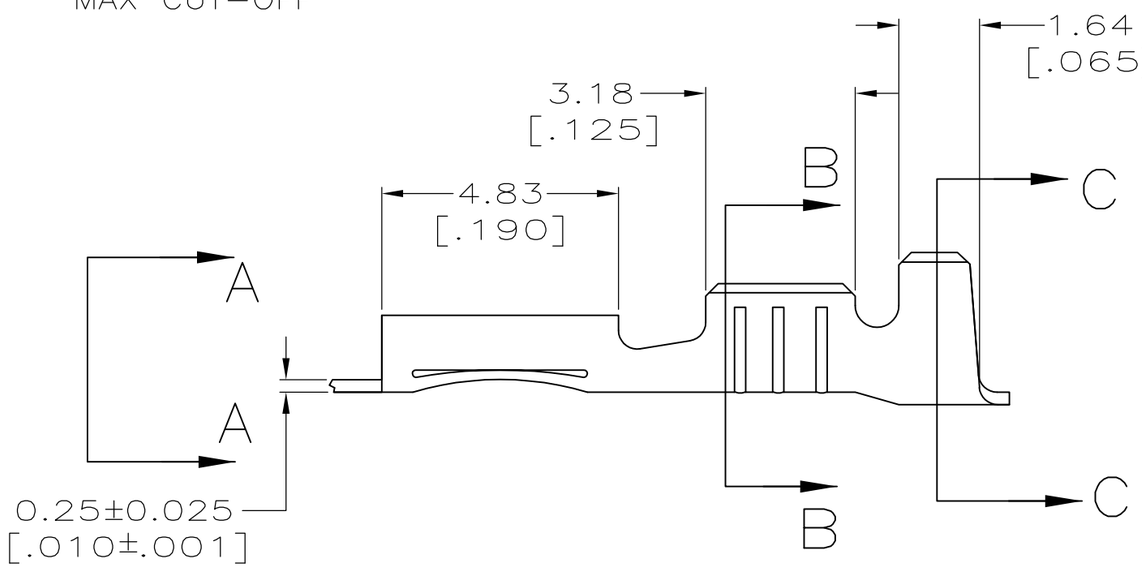

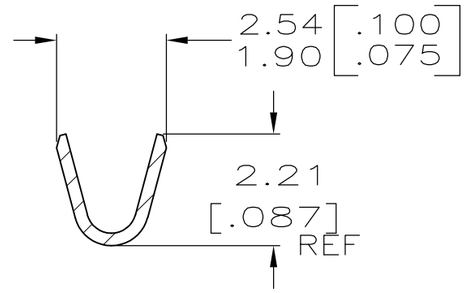

SECTION B-B

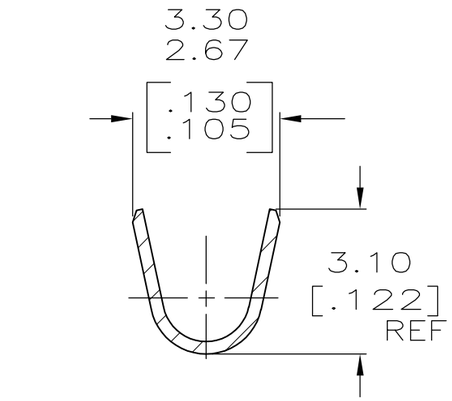

SECTION C-C

STRIP	63391-2
LOOSE PIECE	63391-1
SUPPLIED TO CUSTOMER	PART NO.

THIS DRAWING IS A CONTROLLED DOCUMENT.

DIMENSIONS: mm [INCHES]

TOLERANCES UNLESS OTHERWISE SPECIFIED:

0 PLC	± -
1 PLC	± -
2 PLC	± 0.25 [.010]
3 PLC	± -
4 PLC	± -
ANGLES	± -

MATERIAL: BRASS

FINISH: 0.002032 [.000080] PRE-TIN

DWN	JR RUTH	1/29/98
CHK	P FORTNEY	1/29/98
APVD	J GILLESPIE	1/29/98
PRODUCT SPEC	—	
APPLICATION SPEC	—	
WEIGHT	—	

TE Connectivity

NAME: RECEPTACLE, TAB, 2.36 [.093]

SIZE	CAGE CODE	DRAWING NO	RESTRICTED TO
A3	00779	C-63391	—

CUSTOMER DRAWING

SCALE	SHEET	REV
8:1	1 OF 1	F