THIS INFORMATION IS CONFIDENTIAL AND PROPRIETARY TO CW INDUSTRIES INCORPORATED AND ITS AFFILIATES. IT MAY NOT BE DISCLOSED TO ANYONE, OTHER THAN CW INDUSTRIES PERSONNEL, WITHOUT WRITTEN AUTHORIZATION FROM CW INDUSTRIES INCORPORATED, SOUTHAMPTON, PENNSYLVANIA USA.

DIMENSIONS IN INCHES (MILLIMETERS)
DO NOT SCALE DRAWING .....

Dwg. No. GRL-4022-XXXX

PANEL PIERCING

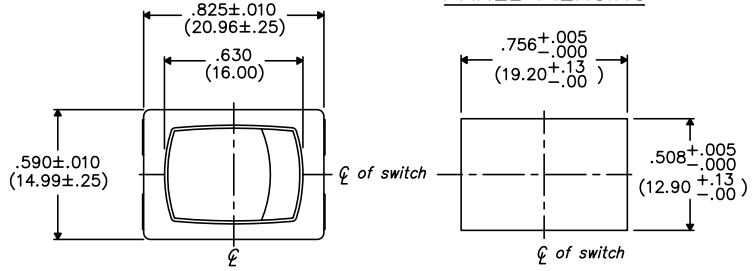

OPTIONAL INSULATING BARRIERS

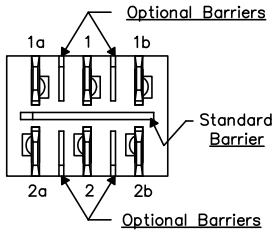

MOUNTING PANEL THICKNESS

Standard–.050" (1.27mm) to .150" (3.81mm).
Optional Mounting Claws for Custom Panel thickness are available.

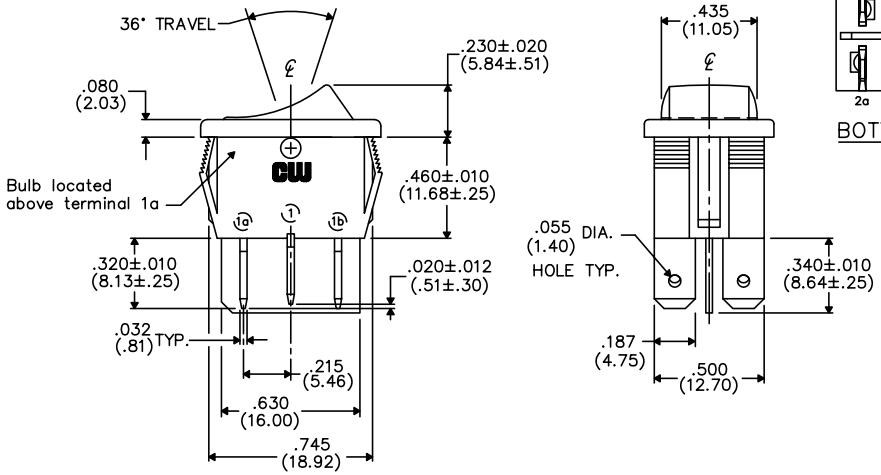

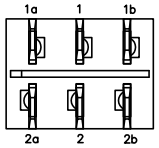

BOTTOM VIEW

PANEL PIERCING POLARIZED

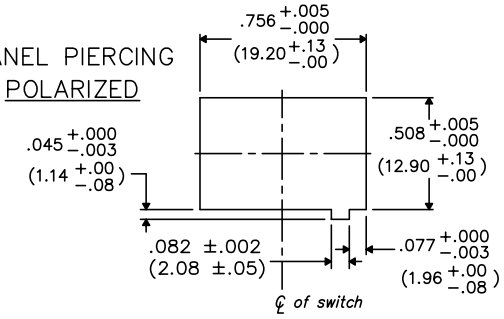

TERMINAL OPTIONS:

.187" (4.75mm) x .032" (.81mm) Solderless
.110" (2.79mm) x .032" (.81mm) Solderless
.187" (4.75mm) x .020" (.51mm) Solderless
.110" (2.79mm) wide with .048" (1.22mm) x .237" (6.02mm) Slot for Soldering

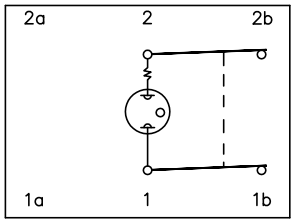

WIRING DIAGRAM SHOWING INTERNAL LAMP CONNECTIONS.

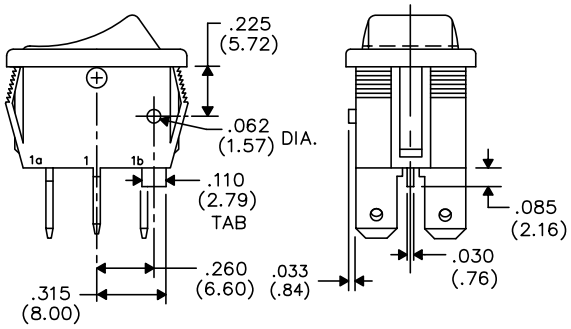

TAB AND POLARIZATION OPTIONS

1	2	3	4	5	6	7	8	9	10

B–FORMAT 2002

REVISIONS

PDF FILE MADE

CW INDUSTRIES
Southampton, Pa. 18966

TOLERANCES UNLESS OTHERWISE SPECIFIED

	METRIC
2 Place Decimal ±.010	1 Place Dec. ±.25mm
3 Place Decimal ±.005	2 Place Dec. ±.13mm
Angles ..... ±1°	

Made for: CW IND.
Drawn by: DGW 10–28–2010
Checked by:
Approval:

Title: LIGHTED ROCKER SWITCH ASSEMBLY D.P./D.T.

Division: SWITCH

Dwg. No. GRL-4022-XXXX