THIS DRAWING IS UNPUBLISHED. RELEASED FOR PUBLICATION -,- .
© COPYRIGHT - By - ALL RIGHTS RESERVED.

LOC	DIST
H	—

REVISIONS

P	LTR	DESCRIPTION	DATE	DWN	APVD
	A	INITIAL RELEASE	27NOV2013	GSK	BvH
	A1	ECR-14-015049	13OCT2014	GSK	BvH

NOTES:
Tolerances cable lengths:

0m to 0.5m	+30mm
0.5m to 1.0m	+50mm
1.0m to 3.0m	+100mm
< 3.0m	+1.5%

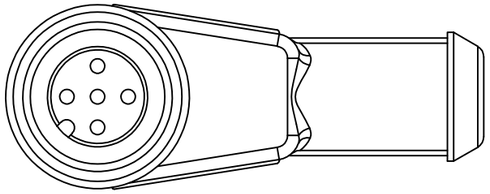

VIEW 'A'

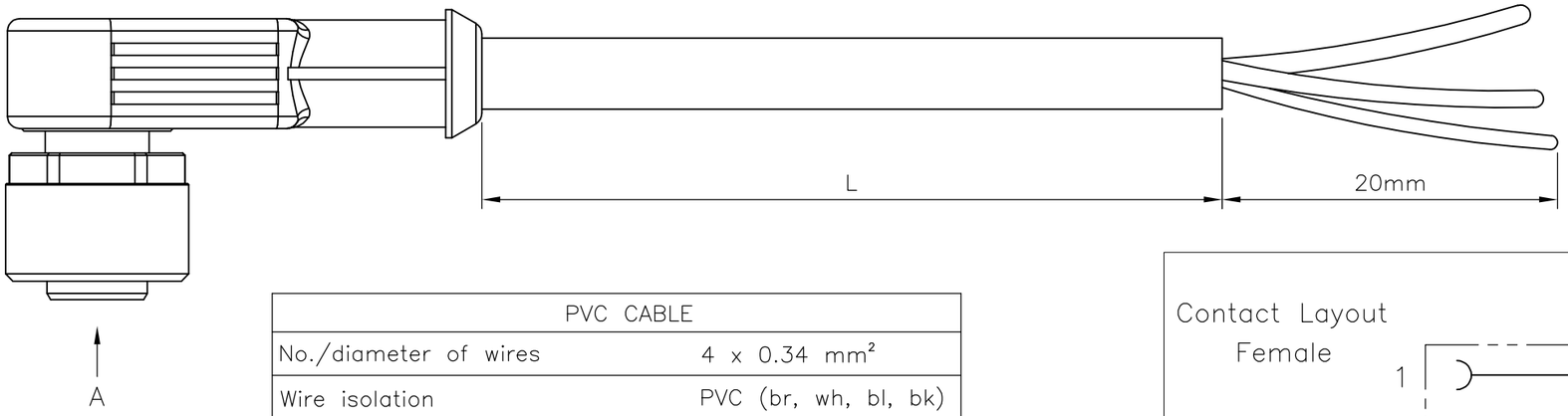

PVC CABLE	
No./diameter of wires	4 x 0.34 mm²
Wire isolation	PVC (br, wh, bl, bk)
C-track properties	
Jacket	PVC (UL/CSA)
Outer diameter	approx. 5.0 mm
Bend radius (moving)	10 x outer diameter
Temperature range (fixed)	-30...+80 °C
Temperature range (mobile)	-5...+80 °C

Contact Layout
Female

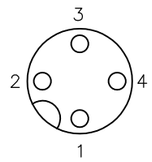

Schematic diagram

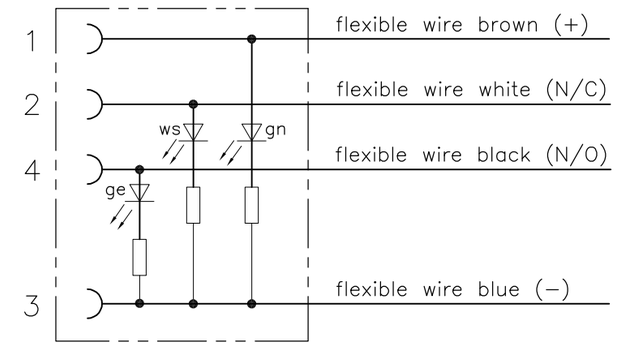

TECHNICAL DATA	
Operating voltage	24 V DC ±25 %
Operating current per contact	max. 4 A
Locking of ports	Screw thread M12 x 1 mm (recommended torque 0.6 Nm) self-securing
Protection	IP65 and IP67 when plugged and screwed down (EN 60529)

PUR CABLE	
No./diameter of wires	4 x 0.34 mm²
Wire isolation	PP (br, wh, bl, bk)
C-track properties	5 million
Jacket	PUR (UL/CSA)
Outer diameter	approx. 4.7 mm
Bend radius (moving)	10 x outer diameter
Temperature range (fixed)	-40...+80 °C
Temperature range (mobile)	-25...+80 °C

LENGTH"L"	MATERIAL	JACKET COLOR	TE PN	DESCRIPTION	ITEM
4 pos 10mtr	PVC	Black	1-2273105-4	4x22AWG PVC 10.0m	8
4 pos 5mtr	PVC	Black	1-2273105-3	4x22AWG PVC 5.0m	7
4 pos 3mtr	PVC	Black	1-2273105-2	4x22AWG PVC 3.0m	6
4 pos 1.5mtr	PVC	Black	1-2273105-1	4x22AWG PVC 1.5m	5
4 pos 10mtr	PUR	Black	2273105-4	4x22AWG PUR 10.0m	4
4 pos 5mtr	PUR	Black	2273105-3	4x22AWG PUR 5.0m	3
4 pos 3mtr	PUR	Black	2273105-2	4x22AWG PUR 3.0m	2
4 pos 1.5mtr	PUR	Black	2273105-1	4x22AWG PUR 1.5m	1

THIS DRAWING IS A CONTROLLED DOCUMENT.

DIMENSIONS: mm

TOLERANCES UNLESS OTHERWISE SPECIFIED:
0 PLC ± -
1 PLC ± -
2 PLC ± -
3 PLC ± -
4 PLC ± -
ANGLES ± -

MATERIAL -
FINISH -

DWN SATHISH KUMAR .G 27NOV2013
CHK B.VELDHOVEN 27NOV2013
APVD A.VAN ZANDVOORT 27NOV2013
PRODUCT SPEC 108-19483
APPLICATION SPEC 114-32127
WEIGHT -

TE Connectivity

NAME M12 X 1.0 ANGLED SOCKET PIGT 3 LED A

SIZE	CAGE CODE	DRAWING NO	RESTRICTED TO
A3	00779	C-2273105	—

CUSTOMER DRAWING | SCALE NTS | SHEET 1 OF 1 | REV A1