THIS DRAWING IS UNPUBLISHED. RELEASED FOR PUBLICATION -,- .
© COPYRIGHT - BY TYCO ELECTRONICS CORPORATION. ALL RIGHTS RESERVED.

LOC	DIST
AA	00

REVISIONS

P	LTR	DESCRIPTION	DATE	DWN	APVD
	B	ECO-07-019669	27AUG2007	LAM	PR
	B1	ECO-15-013597	10SEP2015	AD	SH

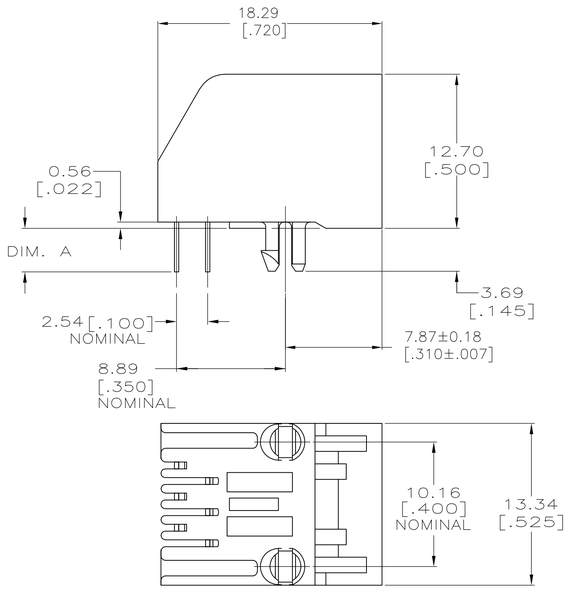

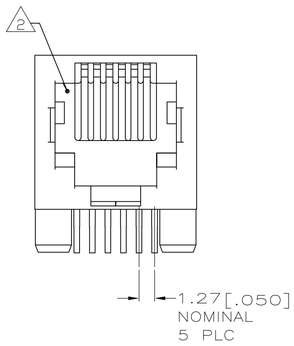

1 MATERIAL: HOUSING – HTN MOLDING COMPOUND, 94V-0 RATED, COLOR: BLACK
TERMINAL – 0.36[.014] THICK PHOSPHOROUS-BRONZE PLATED WITH 1.27μm[.000050] MINIMUM THICK GOLD IN LOCALIZED GOLD PLATE AREA AND 3.81μm[.000150] MINIMUM THICK MATTE TIN IN SOLDER AREA OVER 1.27μm[.000050] MINIMUM THICK NICKEL UNDERPLATE.

2 JACK CAVITY CONFORMS TO FCC RULES AND REGULATIONS PART 68, SUBPART F.

3. DIMENSIONS ARE MAXIMUM UNLESS OTHERWISE SPECIFIED.

4 BULK PACKAGED IN A TRAY.

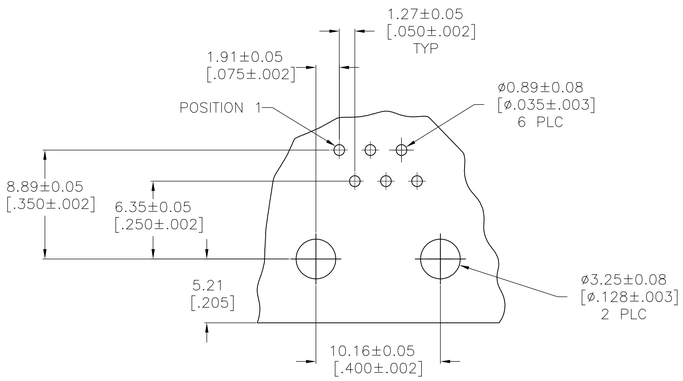

RECOMMENDED PRINTED CIRCUIT BOARD
COMPONENT SIDE

2.60±0.30 [.102±.01]	5569026-2
3.60±0.3 [.140±.01]	5569026-1
DIM.A	PART NO

4	5569026-2
4	5569026-1
PACKAGED	PART NO

THIS DRAWING IS A CONTROLLED DOCUMENT.

DIMENSIONS: mm [INCHES]

TOLERANCES UNLESS OTHERWISE SPECIFIED:
0 PLC ± –
1 PLC ± –
2 PLC ± –
3 PLC ± –
4 PLC ± –
ANGLES ± –

MATERIAL: SEE NOTE 1
FINISH: SEE NOTE 1

DWN 10JUN2005 A. FERNANDEZ-DOCK5
CHK 10JUN2005 J. WESTMAN
APVD 10JUN2005 S. FLICKINGER
PRODUCT SPEC 108-1163
APPLICATION SPEC 114-2048
WEIGHT –

Tyco Electronics
Tyco Electronics Corporation
Harrisburg, PA 17105-3608

NAME: MODULAR JACK ASSEMBLY, 6 POSITION, LOW PROFILE, RIGHT ANGLE

SIZE	CAGE CODE	DRAWING NO	RESTRICTED TO
A1	00779	C-5569026	–

CUSTOMER DRAWING
SCALE 4:1 SHEET 1 OF 1 REV B1