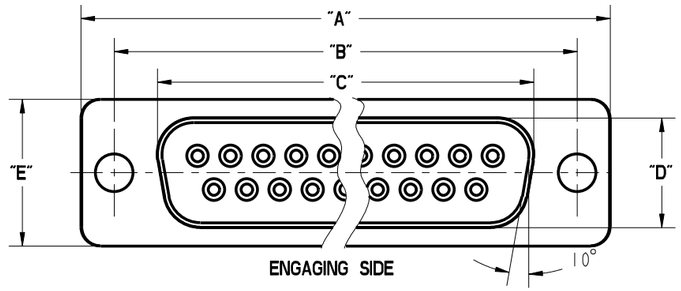

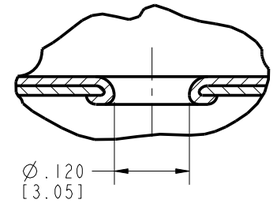

DETAIL B
(2-PLACES)

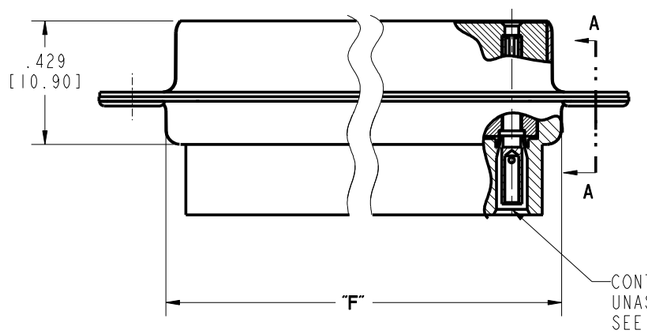

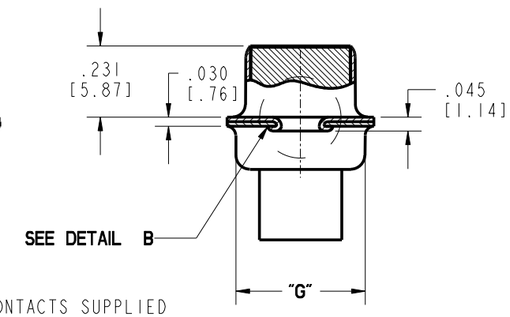

SECTION A-A

NOTES:

1. SPECIFICATIONS:

ELECTRICAL:
WITHSTANDING VOLTAGE: MINIMUM 1000 V RMS @ SEA LEVEL
INSULATION RESISTANCE: INITIAL 5000 MEGOHMS MAXIMUM,
1000 MEGOHMS MIN. AFTER ENVIRONMENTAL TESTING.
CONTACT RATING: 5 AMPS
CONTACT RESISTANCE: 2.7 MILLIOHMS MAX.

MATERIALS:

INSULATOR: BLACK UL94V-O RATED GLASS FILLED NYLON
CONTACT(030-1953-000): COPPER ALLOY
CONTACT AREA PLATING: GOLD OVER NICKEL,
CONNECTOR SHELL: STEEL, PLATING ZINC WITH CLEAR CHROMATE.

ENVIRONMENTAL:
OPERATING TEMPERATURE: -65°C TO +125°C

TERMINATION:
CRIMP WILL ACCOMMODATE # 20 TO 28 AWG WIRE.
TERMINATION-TOOLS:
CRIMP TOOL: M22520/2-01
INSERTION/EXTRACTION TOOL: CIET-20-HDB
POSITIONER: EP-580

2. DIMENSIONS IN [ ] ARE IN MILLIMETERS.

DRAWING REVISIONS

REV	DOCUMENT	APP	DATE
A	DO 05-1094	AKB	1/7/06
B	ECN 06E208		

NUMBER OF POSITIONS	SELECTIVE GOLD FLASH PLATING (.120" [3.05] MTG. HOLES)		CONTACTS	DIMENSION							FRONT MOUNTING HOLE DIMENSIONS		REAR MOUNTING HOLE DIMENSIONS	
	PART NO.	FACTORY NO.		"A"	"B"	"C"	"D"	"E"	"F"	"G"	"X"	"Y"	"X"	"Y"
9	DEUH-9S	702 13 09 001	INCLUDED	1.213 [30.81]	.984 [24.99]	.640 [16.26]	.308 [7.82]	.494 [12.55]	.759 [19.28]	.422 [10.72]	.874 [22.20]	.513 [13.03]	.806 [20.47]	.449 [11.40]
	DEUH-9S-FO	702 13 09 005	NOT INCLUDED											
15	DAUH-15S	702 13 15 001	INCLUDED	1.541 [39.14]	1.312 [33.32]	.968 [24.59]			1.083 [27.51]		1.202 [30.53]		1.134 [28.80]	
	DAUH-15S-FO	702 13 15 005	NOT INCLUDED											
25	DBUH-25S	702 13 25 001	INCLUDED	2.088 53.04]	1.852 [47.04]	1.508 [38.30]			1.625 [41.28]		1.743 [44.27]		1.674 [42.52]	
	DBUH-25S-FO	702 13 25 005	NOT INCLUDED											
37	DCUH-37S	702 13 37 001	INCLUDED	2.729 [69.32]	2.500 [64.50]	2.156 [54.76]			2.272 [57.71]		2.391 [60.73]		2.326 [59.08]	
	DCUH-37S-FO	702 13 37 005	NOT INCLUDED											
50	DDUH-50S	702 13 50 001	INCLUDED	2.635 [66.93]	2.406 [61.11]	2.062 [52.37]	.420 [10.67]	.605 [15.37]	2.178 [55.32]	.534 [13.56]	2.297 [58.34]	.623 [15.82]	2.218 [56.34]	.555 [14.10]
	DDUH-50S-FO	702 13 50 005	NOT INCLUDED											

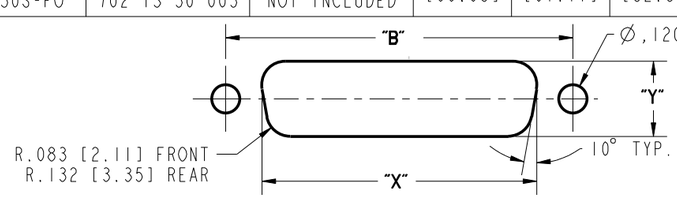

RECOMENDED MTG.HOLE LAYOUT
SEE CHART FOR FRONT AND REAR MTG.DIMENSIONS

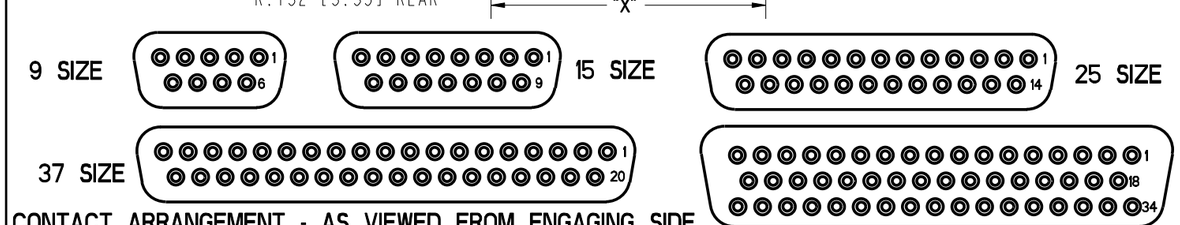

CONTACT ARRANGEMENT - AS VIEWED FROM ENGAGING SIDE

ROHS COMPLIANT

UNITS ENGLISH	PRO/E	Cinch		MODELED BY: V.SKUZA
DO NOT SCALE DRAWING	DRAWN BY V.SKUZA	DATE 06/24/05	TITLE D*U SERIES CRIMP & POKE CONNECTOR SKT.ASS'Y(.120"MTG HOLES)	1700 FINLEY RD LOMBARD, IL. 60148
[redacted]	DESIGN ENGINEER A.BALI	06/24/05	MATERIAL	CONTROL SPEC NUMBER
	DESIGN ENGINEERING MGR. A.SHAH	07/09/05	MATERIAL SPEC NUMBER / FINISH	PROJECT NUMBER C14740
THIS DOCUMENT IS THE PROPERTY OF CINCH. NEITHER THIS DOCUMENT NOR ANY OF THE INFORMATION CONTAINED IN IT MAY BE DUPLICATED OR DISCLOSED WITHOUT PRIOR WRITTEN CONSENT OF CINCH.	MFG. ENGINEERING J.OCEGUERA	07/07/05	CAD FILE NUMBER DXUH-XXS	DRAWING NUMBER D*UH-XXS
	QUALITY ASSURANCE A. VAZQUEZ	07/06/05	CAGE IDENT NO. 71785 / SIZE B	SCALE 1:1 / SHEET 1 OF 1