THIS DRAWING IS UNPUBLISHED. RELEASED FOR PUBLICATION -,- .
© COPYRIGHT - By - ALL RIGHTS RESERVED.

REVISIONS

P	LTR	DESCRIPTION	DATE	DWN	APVD
	H1	REVISED PER ECR-16-010719	27JULT2016	LP	TD

1 CONTINUOUS STRIP ON REELS.

△ HIGH 1ST/6TH RETENTION FORCE

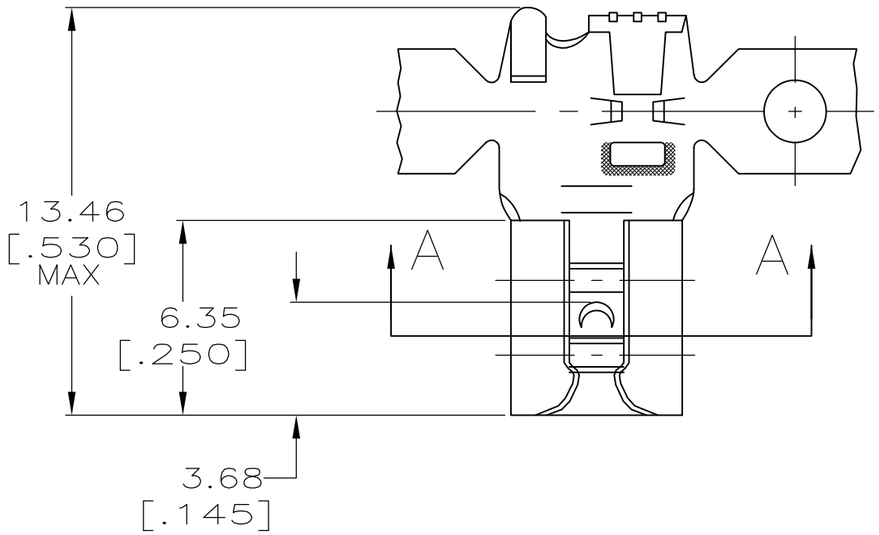

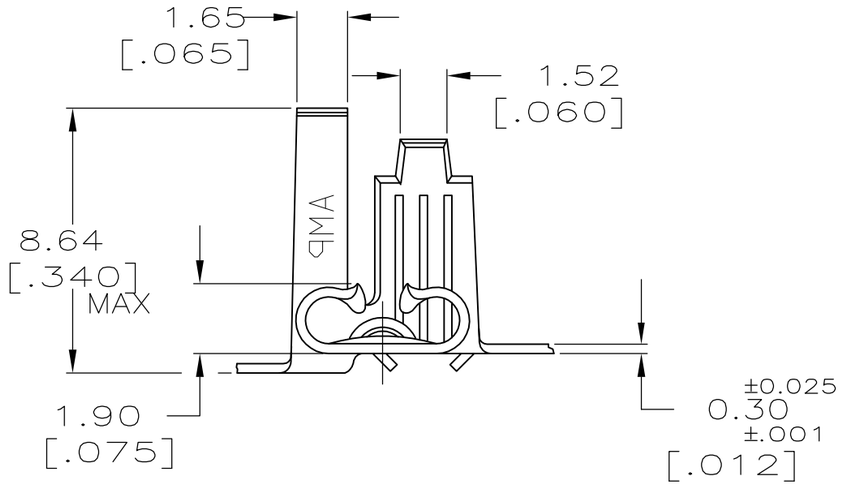

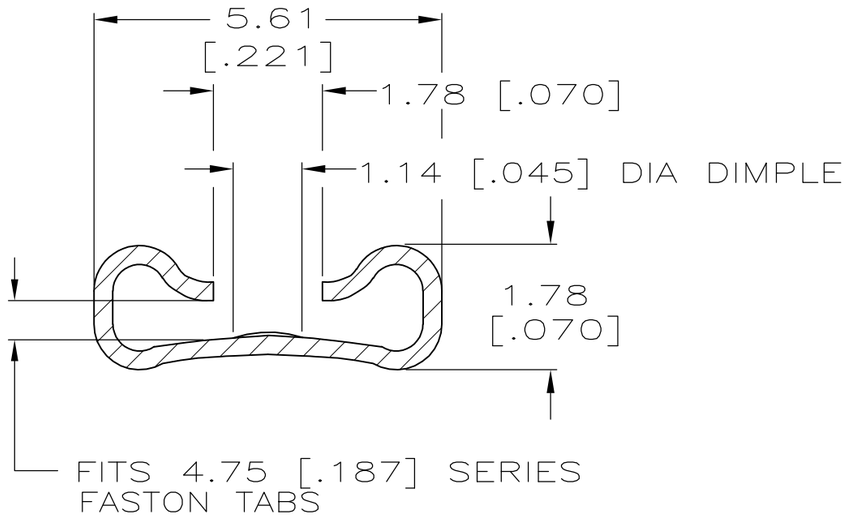

SECTION A–A
SCALE 10:1

FINISH	INSULATION RANGE	WIRE SIZE	MATING TAB THK ±0.025 [.001]	PART NO
TIN	2.79–4.32 [.110–.170] DIA	0.5–1.3mm² [20–16]AWG	0.51 [.020]	△1-42800-2
–				42800-2
				42800-1

THIS DRAWING IS A CONTROLLED DOCUMENT.

DIMENSIONS: mm [INCHES]

TOLERANCES UNLESS OTHERWISE SPECIFIED:
0 PLC ± –
1 PLC ± –
2 PLC ± 0.25 [.010]
3 PLC ± –
4 PLC ± –
ANGLES ± –

MATERIAL: BRASS
FINISH: SEE TABLE

METRIC

DWN JR RUTH 11/1/91
CHK MS FEHER 11/1/91
APVD C MEYERS 11/1/91
PRODUCT SPEC —
APPLICATION SPEC —
WEIGHT 0.000000

TE Connectivity

NAME: RECEPTACLE, FASTON, 4.75 [.187] SERIES

SIZE	CAGE CODE	DRAWING NO	RESTRICTED TO
A3	00779	C-42800	—

CUSTOMER DRAWING | SCALE 5:1 | SHEET 1 OF 1 | REV H1