MICRO SWITCH
FREEPORT, ILLINOIS U.S.A.
A DIVISION OF HONEYWELL
FED. MFG CODE 91929

SWITCH-TOGGLE

CATALOG LISTING
1TL1 SERIES
CHART 2

THIS DRAWING COVERS A PROPRIETARY ITEM AND IS THE PROPERTY OF MICRO SWITCH, A DIVISION OF HONEYWELL. THIS DRAWING IS NOT TO BE COPIED OR USED WITHOUT THE APPROVAL OF MICRO SWITCH.

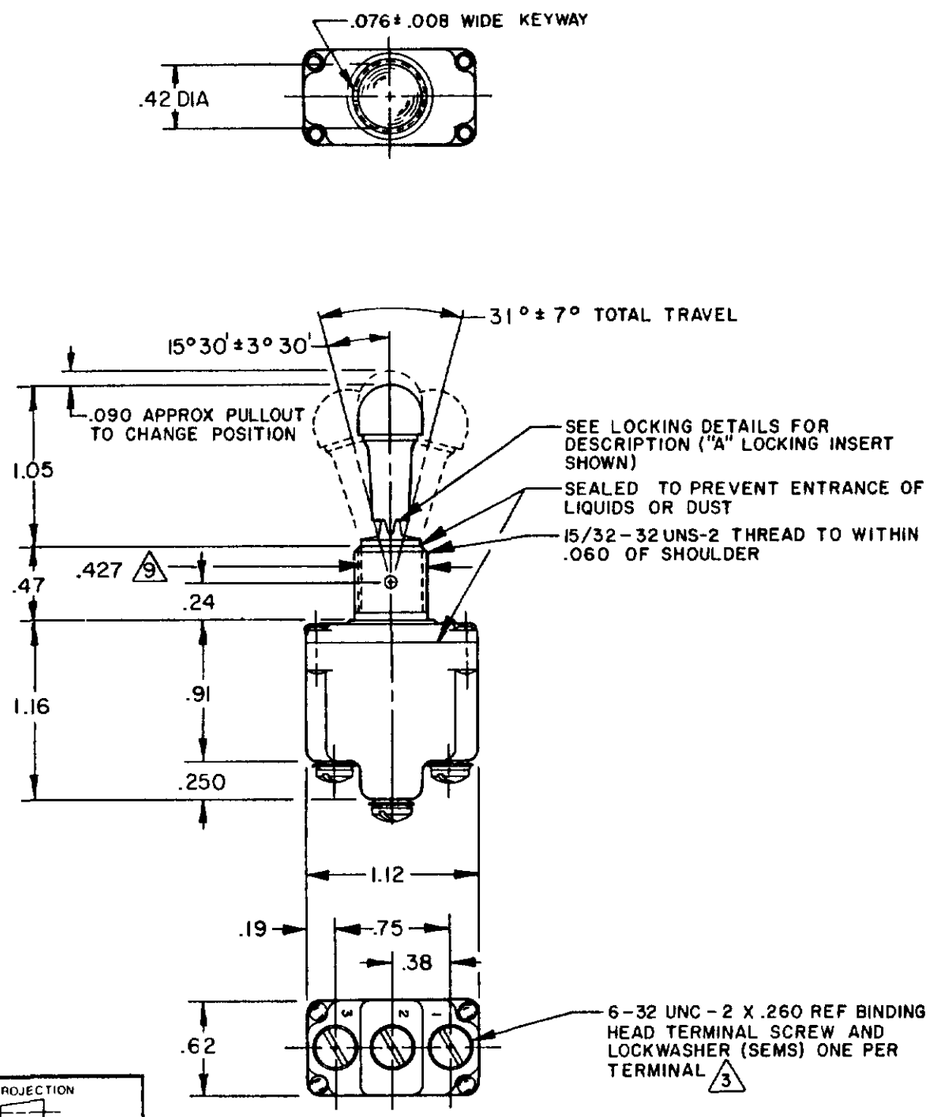

MILITARY STANDARD NUMBER 6	CATALOG LISTING 6	AVAILABLE LOCKING COMBINATIONS FOR CONFIGURATION SEE LETTERED DETAILS	CIRCUIT MADE WITH TOGGLE LEVER IN 7: KEYWAY SIDE (1-2)	CENTER (1-2)	OPPOSITE KEYWAY (2-3)	MILITARY RATING (AMPS) RESISTIVE LOAD DC VOLTS 28	125	250	AC VOLTS 125	250	LAMP LOAD 28 VDC	125 VAC	INDUCTIVE LOAD 28 VDC	125 VAC
MS-24658-21	1TL1-1	A,B,D,E,F,G,H,J,K,L,M,N,P	ON	OFF	ON	20	75	5	15	6	5	3	15	10
MS-24658-22	1TL1-2	D,F,G	OFF	NONE	ON									
MS-24658-23	1TL1-3	D,F,G	ON	NONE	ON									
MS-24658-24	1TL1-21	E,F,K,M	NONE	OFF	ON									
MS-24658-33	1TL1-31	E,F,K,M	NONE	ON	ON									
						(REFER TO L191 FOR UL RATING)								
MS-24658-29	1TL1-4	F	MOM OFF	NONE	ON	15	75	.5	15	6	4	2	10	7
MS-24658-31	1TL1-5	E,F,K,L,M,N	MOM ON	OFF	ON									
MS-24658-30	1TL1-6	F	MOM ON	NONE	OFF									
MS-24658-27	1TL1-7	E,L,N	MOM ON	OFF	MOM ON									
MS-24658-26	1TL1-8	F	MOM ON	NONE	ON									
						(REFER TO L192 FOR UL RATING)								
MS-24658-32	1TL1-51	E	NONE	ON	MOM ON									
MS-24658-28	1TL1-61	E	MOM ON	OFF	NONE									

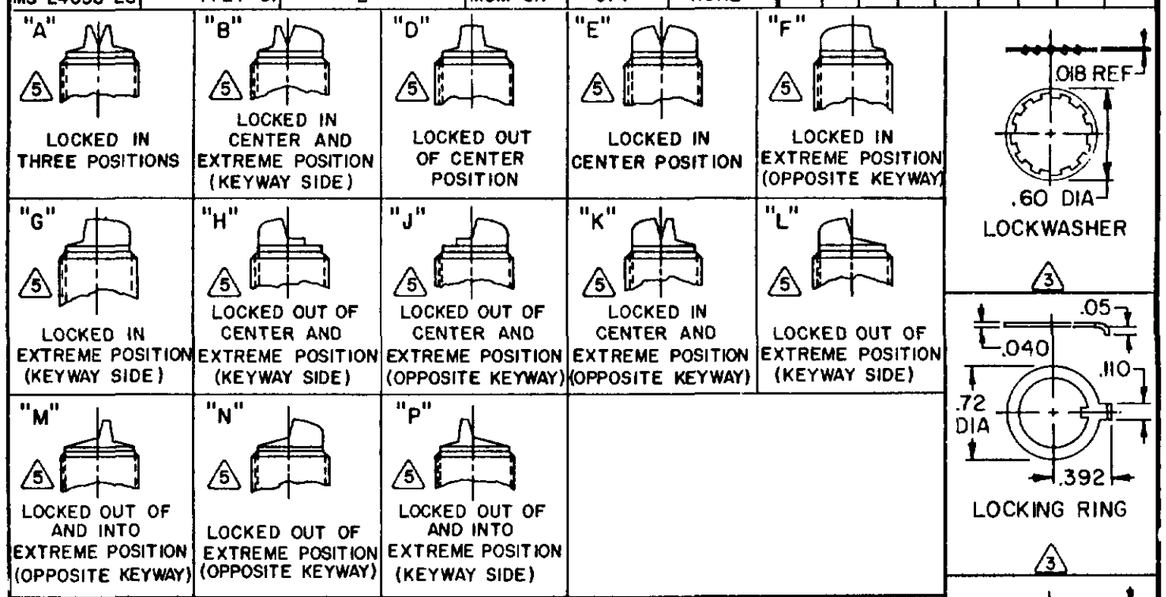

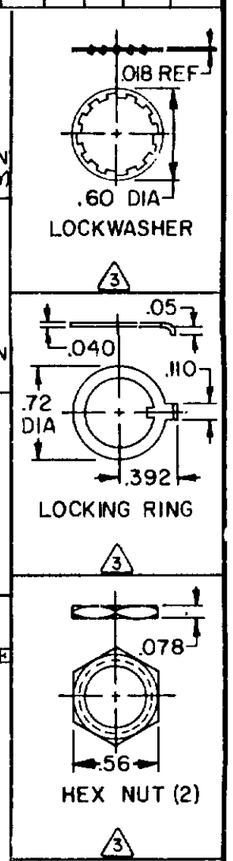

NOTES
1 - SWITCHES ARE CAPABLE OF WITHSTANDING A TEMPERATURE OF 160°F CONTINUOUSLY AT FULL RATED LOAD
2 - CIRCUIT DESIGNATION, MICRO SWITCH CATALOG LISTING AND MS NUMBER MARKED ON SIDE OF SWITCH
3 FURNISHED UNASSEMBLED
4 - FOR TERMINAL COVER, SEE MICRO SWITCH CATALOG LISTING 5PA7
5 KEYWAY SHOWN ON LEFT SIDE
6 SUFFIX LETTER MUST BE ADDED FOR DESIRED TYPE OF TOGGLE LOCKING. SEE CHART FOR AVAILABLE LOCKING COMBINATIONS
7 - APPLIES ONLY TO "ON" AND "MOMENTARY ON" POSITIONS
8 - THESE SWITCHES ARE QUALIFIED UNDER MIL-S-3950
9 FROM BOTTOM OF KEYWAY TO MAJOR DIA. OF 15/32 THREAD

THIRD ANGLE PROJECTION

SCALE FULL

DO NOT SCALE PRINT

TOLERANCES
APPLY TO DESIGN UNITS. CONVERSIONS ARE ONLY FOR REFERENCE. UNLESS NOTED TOLERANCES ARE ±

	DIM mm	TOL mm/in	DIM in	TOL mm/in
NO PLACES	X	1/04		
ONE PLACE	X.X	0.4/0.016	X.X	0.8/.03
TWO PLACES	X.XX	0.16/.006	X.XX	0.38/.015
THREE PLACES			X.XXX	0.13/.005
ANGLES				

DESIGN UNITS SI METRIC ☐ US CUSTOMARY ■

RAW MATERIAL-COMMERCIAL STANDARD
MICRO SWITCH STANDARDS APPLY
DIMENSIONS ARE TO BE MET BEFORE PROTECTIVE COATINGS ARE APPLIED

WEIGHT .08 LBS. APPROX

15A-125,250 OR 277VAC
1/2HP-125VAC;1HP-250,277VAC
5A-125VAC "L" CODE L191

10A-125,250 OR 277VAC
1/4HP-125VAC;1/2HP-250,277VAC
3A-125VAC "L" CODE L192

CATALOG LISTING 1TL1 SERIES CHART 2
PAGE 1 OF 1
ISSUE M 31
REPLACES
RELEASE NO
CHECK

REVISIONS
A C077942 JAF 28 JUN 94
B C095061 DLT 2 JUN 99
C CO-94429 CSL 24 NOV 99
D 204846 SAV 7 FEB 02

FORMTEK
DRAWN JAF 28 JUN 94