UNIT: mm

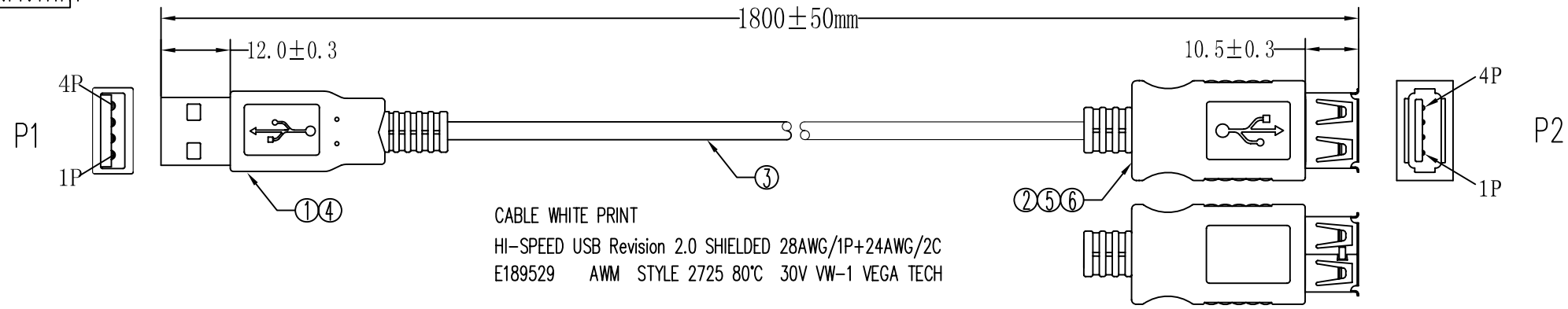

CABLE WHITE PRINT

HI-SPEED USB Revision 2.0 SHIELDED 28AWG/1P+24AWG/2C

E189529 AWM STYLE 2725 80℃ 30V VW-1 VEGA TECH

PIN ASSIGNMENT:

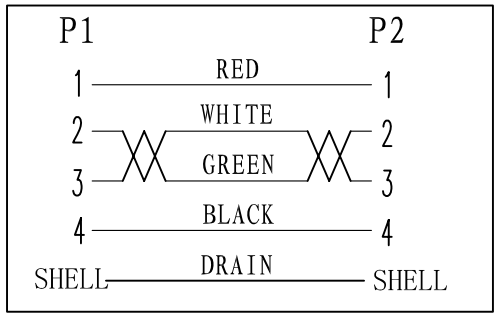

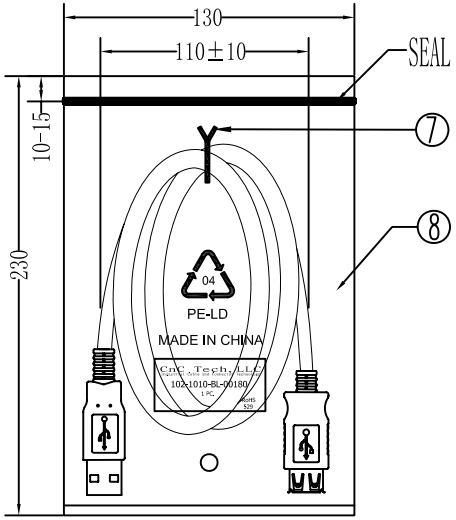

1PC/PE BAG

Electrical test:
1.100% short,open,miswire test
2.Conduct resistance:2 Ohm(max)
3.Insulation resistance:5Mohm(min)
4.dielectric test:DC 300V

NO.	NAME	Q'TY	SPECIFICATION
⑨	PE BAG	1/10	CLEAR SIZE:280*330*0.05mm PRINT BLACK"MADE IN CHINA"+"10PCS"
⑧	PE BAG	1	CLEAR SIZE:130*230*0.05mm PRINT BLACK"MADE IN CHINA"+"1PCS"
⑦	TIE	1	WHITE L=100mm
⑥	IN JACKET	3g	CLEAR LDPE(MOULD NO:NM-027)
⑤	OUT JACKET	7g	BLACK PVC-40P (MOULD NO:WM-83)
④	OUT JACKET	6g	BLACK PVC-40P (MOULD NO:WM-40)
③	CABLE	1	BLACK USB2.0 UL2725 28#/1P+24#/2C+AEB OD:4.7mm L=1780±10mm
②	CONN	1	USB2.0 A FEMALE SHELL:NICKEL PIN G/F SHORT TYPE INSULATOR COLOR:WHITE
①	CONN	1set	USB2.0 A MALE SHELL:NICKEL PIN G/F 3PCS-TYPE INSULATOR COLOR:WHITE

CnC Tech, LLC

Industrial Cable and Connector Technology

DRAWED	Andy	DRAWING NO	VG/LJQ-094-020
CHECKED		CUSTOMER	CNC
APPROVAL		ITEM NO.	102-1010-BL-00180
DECIDED		DATE	2013-8-23
VERSIONS/EDITEON	A/0	PROJECTION	