B-430Z REV. AE

REVISIONS			RELEASED	
SYM	DESCRIPTION		DATE	APPROVED
AC	35454	NOTE 3 ADDED	98/05/04	RS
AD	39519	"BOEING" ADDED TO VIB SPEC & CONNECTOR P/N, .43 & .92 ADDED, 4.72 MAX WAS 4.87, 4.48 MAX WAS 4.45	99/05/11	RS
AE	41633	.43 & .92 REMOVED	00/02/18	RS

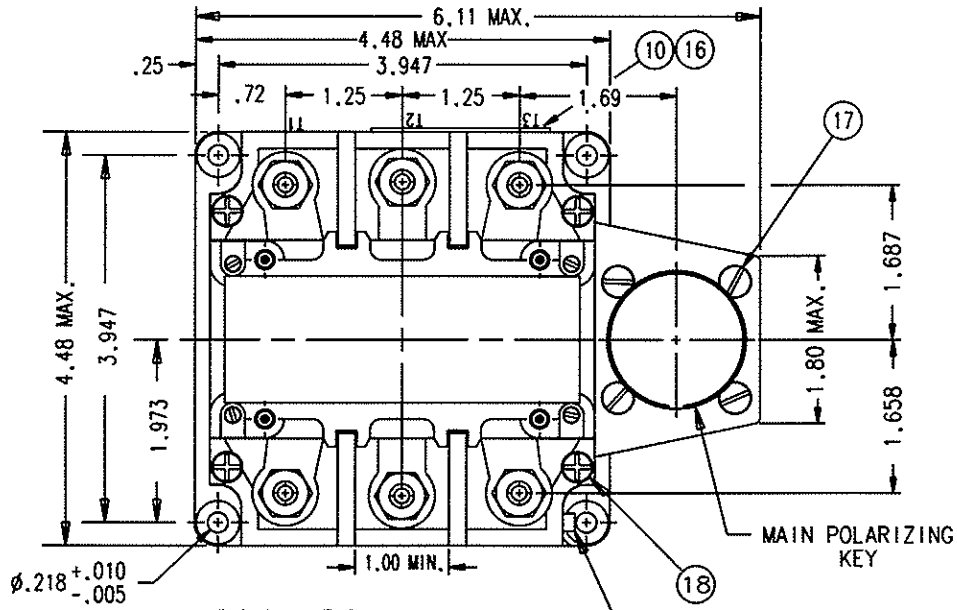

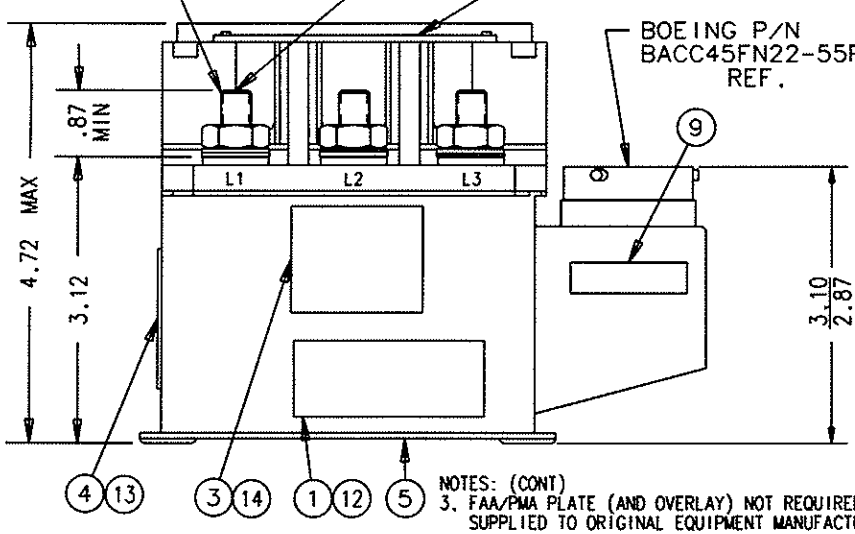

NOTES: (CONT)
3. FAA/PMA PLATE (AND OVERLAY) NOT REQUIRED ON UNITS SUPPLIED TO ORIGINAL EQUIPMENT MANUFACTURERS.

FAA-PMA

CONSTRUCTION	GASKET SEALED (VENTED)
MAIN CONTACTS	
CONFIGURATION	3 PST (DOUBLE BREAK) MAG. LATCHING
VOLTAGE	115/200 VOLTS FREQ. 400 HZ
CURRENT RES.	275 AMP 115/200 VAC CONTINOUS
RES.	350 AMP 115/200 VAC 15 SEC
INTERRUPT	5000 AMP
AUXILIARY CONTACTS	
CONFIGURATION	12 SPST N.O., 14 SPST N.C.
VOLTAGE	115 VAC 400 HZ 28 VDC
CURRENT	7.5 AMP
COIL DATA	
DUTY CYCLE	CONTINOUS (SELF-DEENERGIZING)
OPERATING VOLTAGE	
CLOSE MIN.	15 VOLTS AT 85°C
MAX.	29 VOLTS
TRIP MIN.	15 VOLTS
MAX.	29 VOLTS
RESISTANCE CLOSING	3 OHMS MIN.
TRIP	5 OHMS MIN.
ENVIRONMENTAL DATA	
OPERATING TEMP.	-54°C MIN. +71°C MAX.
VIBRATION	PER BOEING D6-13104, AREA 1, CAT. A
ACCELERATION	MIL-E-5272 METHOD 4.16.3
SHOCK	MIL-E-5272 METHOD 4.15.5
ALTITUDE	45,000 FT.
OPERATING TIME	
CLOSE	15 MSEC MAX. AT 22VDC TO 29VDC
TRIP	20 MSEC MAX. AT 15VDC TO 29VDC
LIFE ELECTRICAL	50,000 CYCLES MIN.
LIFE MECHANICAL	100,000 CYCLES MIN.
WEIGHT MAX.	4 LBS.

NOTES:
1. TERMINAL COVER, ITEM 2, REMOVED FROM TOP VIEW.
2. MOUNTING SURFACE SHALL PROVIDE ELECTRICAL GROUND.

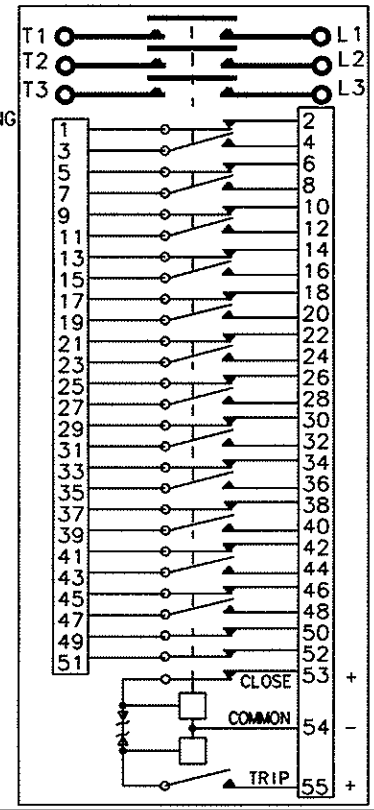

FIND NO	QTY REQD	PART OR IDENTIFYING NO	NOMENCLATURE OR DESCRIPTION	FSCM NO	DRAWING OR SPECIFICATION	MATERIAL OR NOTE
10	1	58400-031	PLATE-FAA/PMA			
9	1	25695-001	WARNING-PLATE			
8	6	51807-230	WASHER-LOCK, .375 X .687C .094 SPT		MS35338-141	STAINLESS STEEL
7	6	51704-010	WASHER, .390 X .625 X .032 FL.		AN960C616L	STAINLESS STEEL
6	6	50407-370	NUT, 3/8-24 X .562 X .328		MS51972-3	STAINLESS STEEL
5	1	36805-010	CONTACTOR ASSEMBLY-PRI.			
4	1	36755-001	PLATE-WIRING DIAGRAM			
3	1	36754-001	PLATE-NAME			
2	2	36456-010	TERMINAL COVER			
1	1	36749-001	PLATE CAUTION			

FIND NO	QTY REQD	PART OR IDENTIFYING NO	NOMENCLATURE OR DESCRIPTION	FSCM NO	DRAWING OR SPECIFICATION	MATERIAL OR NOTE
18	AR	54100-001	SILASTIC - BLACK			
17	AR	54102-001	GLYPTOL			
16	1	39529-047	OVERLAY			
15						
14	1	39529-009	OVERLAY			
13	1	39529-008	OVERLAY			
12	1	39529-002	OVERLAY			
11						

UNLESS OTHERWISE SPECIFIED DIMENSIONS ARE IN INCHES TOLERANCES ON

2 PL DEC.	3 PL DEC.	ANGLES
±.06	±.010	±1°

MATERIAL

CMM

REF BOEING 60B00010-25

DR BY	RLS	00/03/03
CHK BY	RS	00/03/03
ENGR		00-03-08
MFG		00/03/09
RELEASE		
CONTR NO.		
GOVT APPVL		

HARTMAN ELECTRICAL MANUFACTURING
MANSFIELD, OHIO

CONTACTOR-3PST MAGN. LATCH
275 AMP. 115/200V. 400 HZ
08C

SIZE	CODE IDENT	DWG NO.
C	74063	B-430Z

SCALE NONE SHEET

Mouser Electronics

Authorized Distributor

Click to View Pricing, Inventory, Delivery & Lifecycle Information:

TE Connectivity:
B430Z