MICRO SWITCH
FREEPORT, ILLINOIS, U.S.A.
A DIVISION OF HONEYWELL
FED. MFG. CODE 91929

SWITCH–ENCLOSED

CATALOG LISTING
DTE6-2RN4

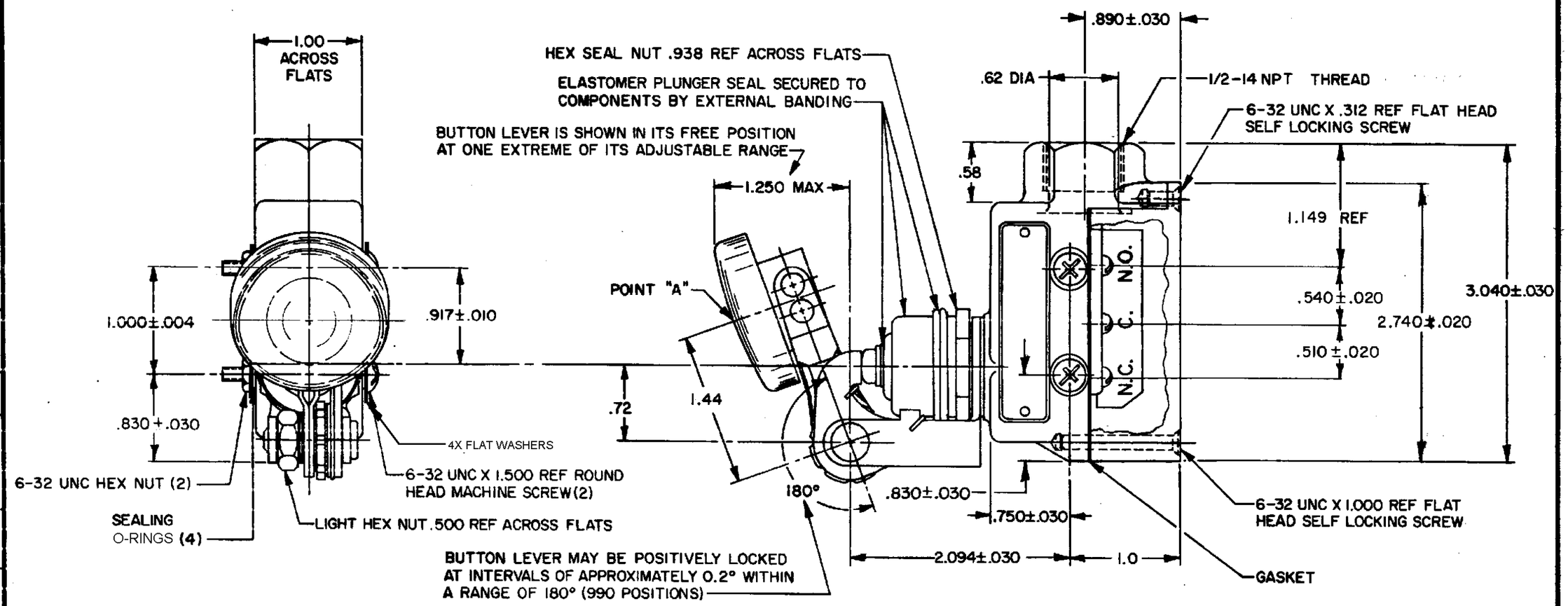

NOTE –

1 – 4-40 UNC X .125 REF TERMINAL SCREW AND LOCKWASHER (6)

2 – BUTTON LEVER BRACKET ASSEMBLY MAY BE SET AT ANY POSITION AROUND AXIS OF PLUNGER

3 - SEAL RATING : NEMA 1.3
IP 54

THIS DRAWING COVERS A PROPRIETARY ITEM AND IS THE PROPERTY OF MICRO SWITCH, A DIVISION OF HONEYWELL. THIS DRAWING IS NOT TO BE COPIED OR USED WITHOUT THE APPROVAL OF MICRO SWITCH.

CHARACTERISTICS AT POINT "A"	ELECTRICAL DATA	
PRETRAVEL ---------- .266 MAX DIFFERENTIAL TRAVEL ---- .165 MAX OVERTRAVEL ---------- .219 MIN BASIC SWITCH REPLACEMENT --- DT-2R-A7	CONTACT ARRANGEMENT D P D T 10A-125 OR 250 VAC 0.3A-125 VDC; 0.15A-250 VDC CODE L59	SCALE FULL DO NOT SCALE PRINT UNLESS OTHERWISE NOTED DIMENSIONS ARE IN INCHES TOLERANCES ARE: ONE PLACE (.0) ±.030 TWO PLACE (.00) ±.015 THREE PLACE (.000) ±.005 ANGLES ±1° WEIGHT .71 LB

DRAWN	WJM	27 FEB 80
CHECK		
CLASSIFIED		
CHECK		
APPROVED	RDE	3
CHECK		
MARKED		
CHECK		
REVISIONS		
A	CO 53191-D	KJS MAR 84
B	C055989	CJH NOV 84
C	C054958	TSK FEB 85
D	C072661	DAW SEP 92
E	CO-77179B	KDR 21 FEB 94
F	0016895	VKR 18NOV05
ISSUE	BP	18NOV05
DRAWING NUMBER	M DTE6-2RN4	7
RELEASE NO.	PR-8488	
REPLACES		

FO-5285 1-A