THIS DRAWING IS UNPUBLISHED. RELEASED FOR PUBLICATION –,– .
© COPYRIGHT – By – ALL RIGHTS RESERVED.

LOC	DIST
AF	50

REVISIONS

P	LTR	DESCRIPTION	DATE	DWN	APVD
	H1	REVISED PER ECR–14–013776	17SEP2014	NK	DC

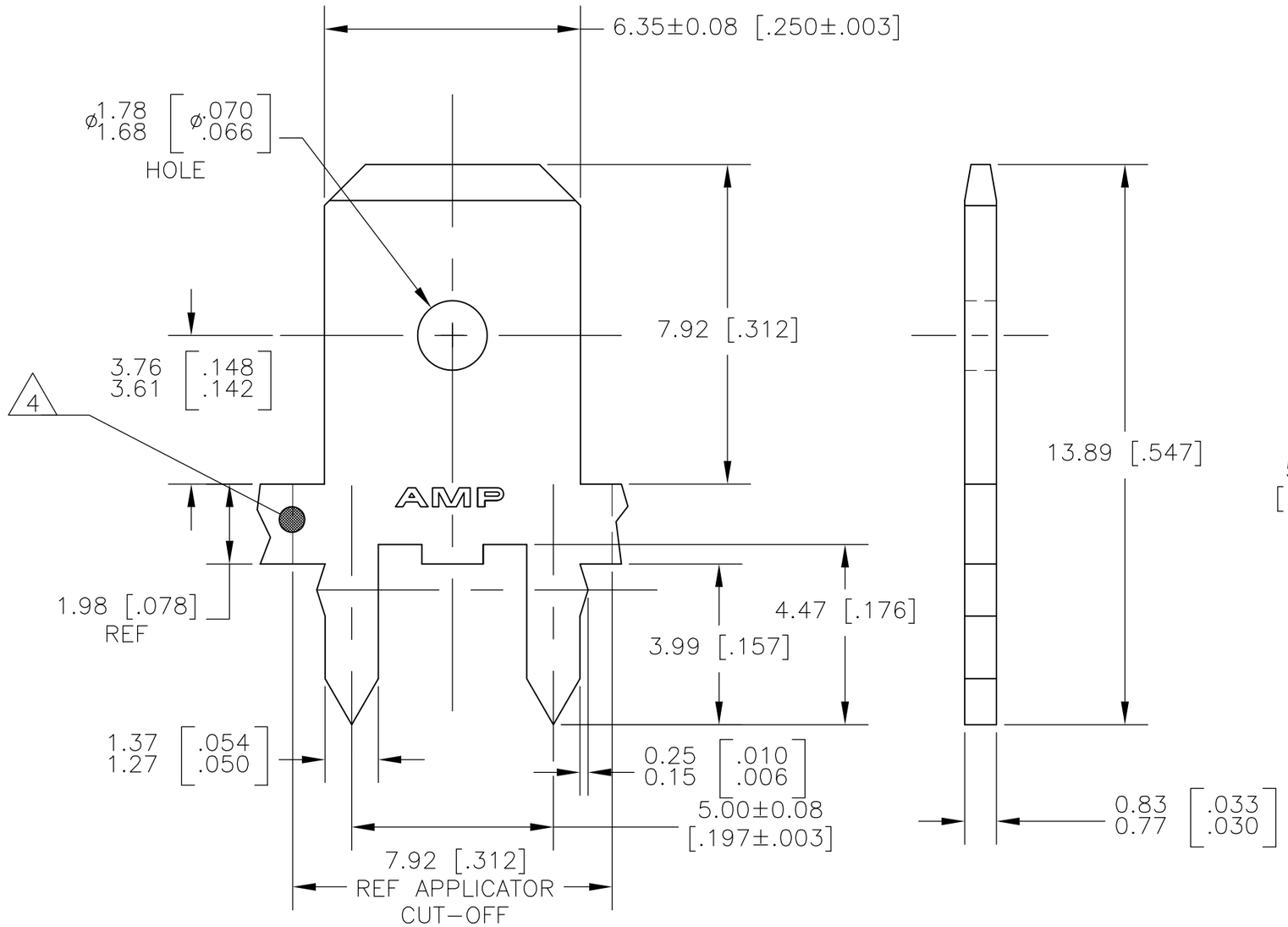

1 CONTINUOUS STRIP ON REELS.

2 TIN PLATE 0.00381 [.000150] MIN OVER 0.00254 [.000100] MIN THK COPPER OR TIN PLATE 0.00381 [.000150] MIN OVER 0.00127 [.000050] MIN THK NICKEL.

3 FEED IS 7.92±0.076 [.312±.003]

4 OPTIONAL ID MARK, LOCATION APPROX AS SHOWN.

5 REELED WITH INTERLEAVING PAPER.

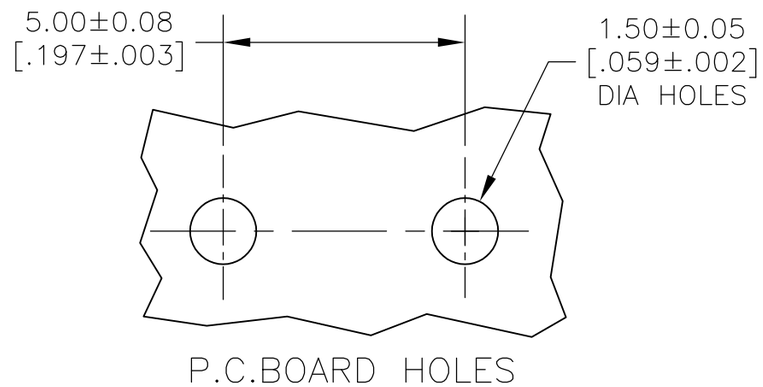

5	63986–3
	63986–1
	PART NUMBER

THIS DRAWING IS A CONTROLLED DOCUMENT.

DIMENSIONS: mm[INCHES]

TOLERANCES UNLESS OTHERWISE SPECIFIED:

0 PLC	± –
1 PLC	± –
2 PLC	± 0.25 [.010]
3 PLC	± –
4 PLC	± –
ANGLES	± –

MATERIAL: BRASS

FINISH: 2

DWN	JR RUTH	30NOV00
CHK	MS FEHER	30NOV00
APVD	G PORTA	30NOV00
PRODUCT SPEC	—	
APPLICATION SPEC	114–2115	
WEIGHT	—	

TE Connectivity

NAME: TAB, FASTON, PC BOARD, 6.35 [.250] SERIES

SIZE	CAGE CODE	DRAWING NO	RESTRICTED TO
A3	00779	C–63986	—

CUSTOMER DRAWING | SCALE 8:1 | SHEET 1 OF 1 | REV H1

1470–19 (3/11)