To all our customers

Regarding the change of names mentioned in the document, such as Mitsubishi Electric and Mitsubishi XX, to Renesas Technology Corp.

The semiconductor operations of Hitachi and Mitsubishi Electric were transferred to Renesas Technology Corporation on April 1st 2003. These operations include microcomputer, logic, analog and discrete devices, and memory chips other than DRAMs (flash memory, SRAMs etc.) Accordingly, although Mitsubishi Electric, Mitsubishi Electric Corporation, Mitsubishi Semiconductors, and other Mitsubishi brand names are mentioned in the document, these names have in fact all been changed to Renesas Technology Corp. Thank you for your understanding. Except for our corporate trademark, logo and corporate statement, no changes whatsoever have been made to the contents of the document, and these changes do not constitute any alteration to the contents of the document itself.

Note : Mitsubishi Electric will continue the business operations of high frequency & optical devices and power devices.

Renesas Technology Corp.
Customer Support Dept.
April 1, 2003

M61501FP

AUDIO SIGNAL PROCESSOR with 6CH VOLUME

DESCRIPTION

The M61501FP is the sound controller corresponded to discrete 5.1ch Analog Input. This IC consists of 6ch Master Volume, Tone Control, 7 Input Sekector and Bass Boost.

PACKAGE OUTLINE

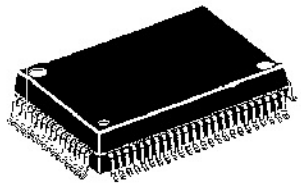

80P6N

PITCH : 0.8 mm

SIZE : 20.0 mm×14.0mm×2.8mm

FEATURES

- 7Input Selector(A,B,C,D,E,F,G,mute Mode)
- Selector Output ATT(-6dB) [ON/OFF]
- Tone Control
  Bass/Treble(0 to ±10dB/2dB Step)
- 6ch Electronic Volume (64Step;0 to -80dB,-∞)
- Bass Boost [4step change ; 0,3,6,10dB]
- Switch for 5.1ch Input [Normal/5.1ch]
- Change Switch for DPL
- 2 Lines Rec Output(with Mute)
- Output for Super Woofer [L+R+C]
- ±Power Supply, Mono Supply (It needs external common at mono supply.)

RECOMMENDED OPERATING CONDITIONS

Supply voltage range ±4.5V to ±7.5V [9V to 15V (at Mono Supply)]

APPLICATION

AV Amp, Mini Compo etc.

SYSTEM BLOCK DIAGRAM

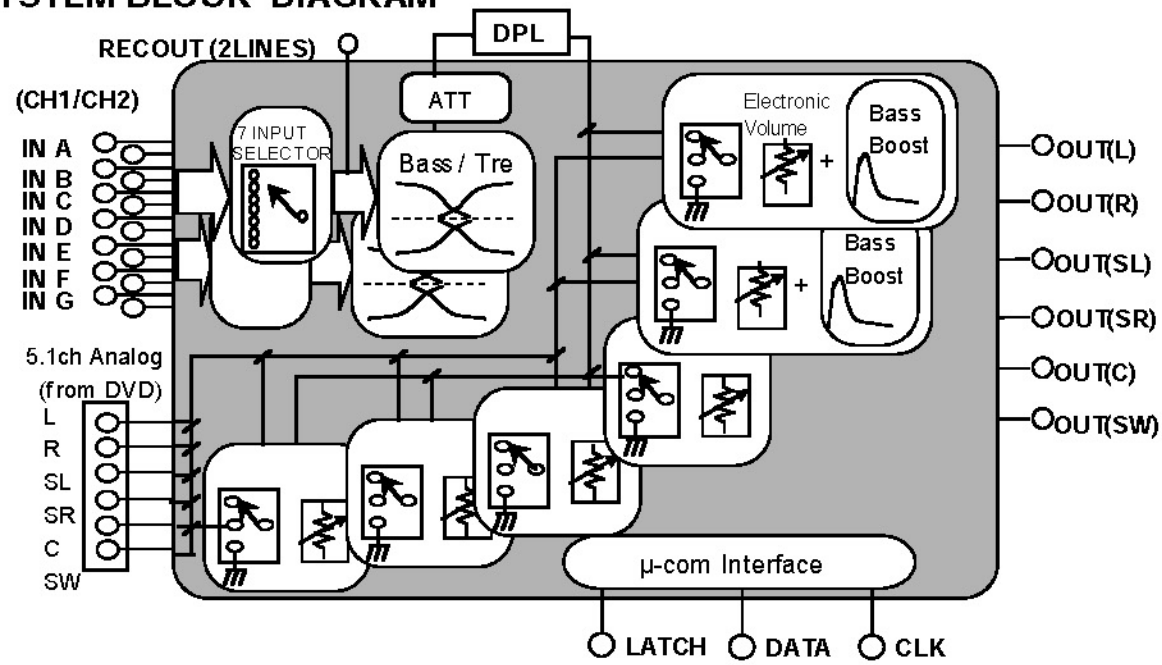

BLOCK DIAGRAM

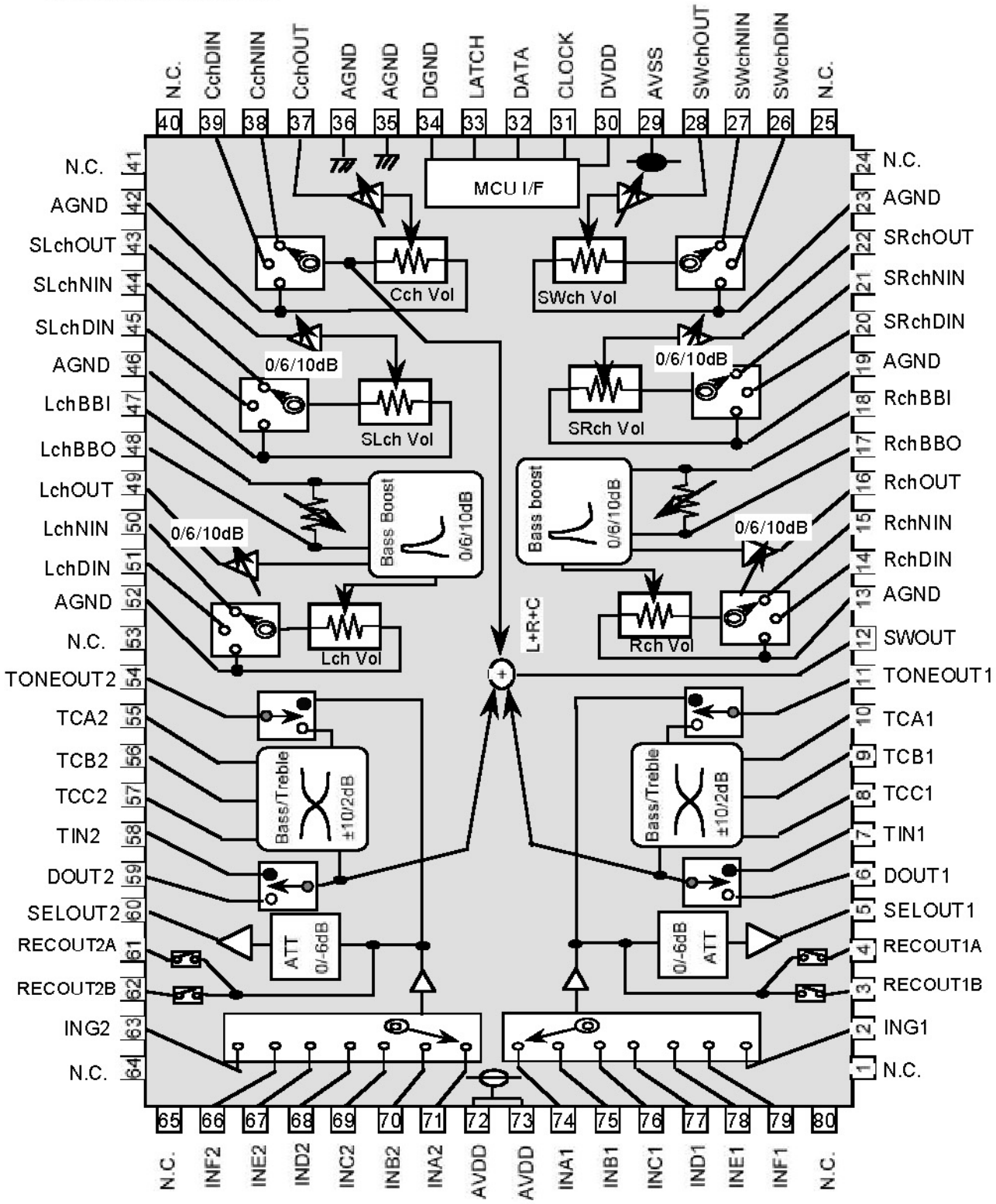

ABSOLUTE MAXIMUM RATINGS

SYMBOL	PARAMETER	CONDITION	LIMITS	UNIT
AVDD,AVSS	Analog supply voltage		±7.8	V
DVDD	Digital supply voltage		6.0	V
Pd	Digital supply voltage	Ta≤25°C	1250	mW
K	Thermal Derating ratio	Ta>25°C, with Board(Cf1)	12.5	mW/°C
Topr	Operating temperature		-20 to +55	°C
Tstg	Storage temperature		-40 to +125	°C

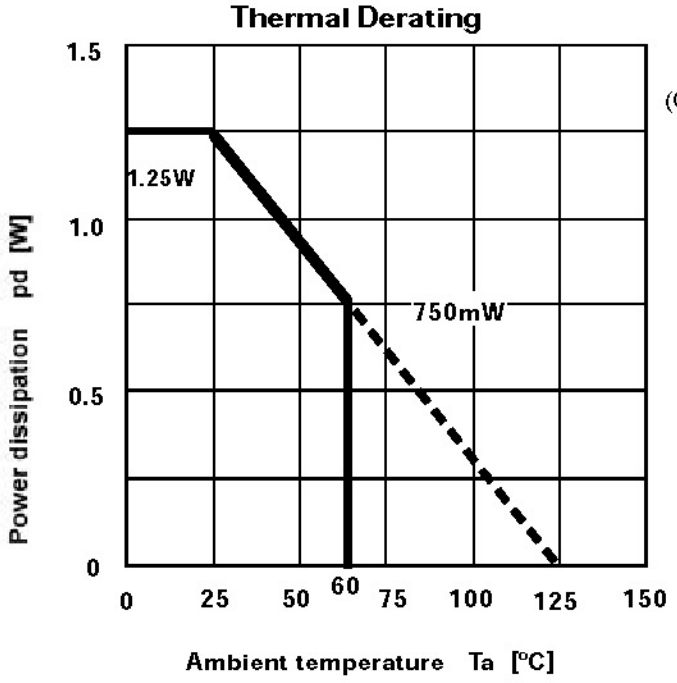

(Cf1) Board

Size of Print Board
140mm × 140mm
Thickness of Print Board
1.6mm
Material of Print Board
Epoxy Galas
One side Cu Pattern
Thickness of Cu
18μm
Pattern Measurement of Cu
0.25mm(W) × 50mm(L)/Lead

RECOMMENDED OPERATING CONDITION

(Ta=25°C unless otherwise noted)

ITEM	SYMBOL	CONDITION	RANGE			UNIT
			MIN	TYP	MAX	
Analog plus supply voltage	AVDD	Cf1	4.5	7.0	7.5	V
Analog minus supply voltage	AVSS	Cf1	-7.5	-7.0	-4.5	V
Digital supply voltage	DVDD	DVDD≤AVDD	4.5	5.0	5.5	V
Logic "H"Level Input voltage	VIH	Cf2	DVDD-0.7	—	VDD	V
Logic "L"Level Input voltage	VIL		0	—	DGND+0.7	V

Cf1) Please apply AVDD at first,then apply AVSS,and apply DVDD at last.

Cf2) It is possible that DVDD is applied at 3.3V.

DATA AND CLOCK

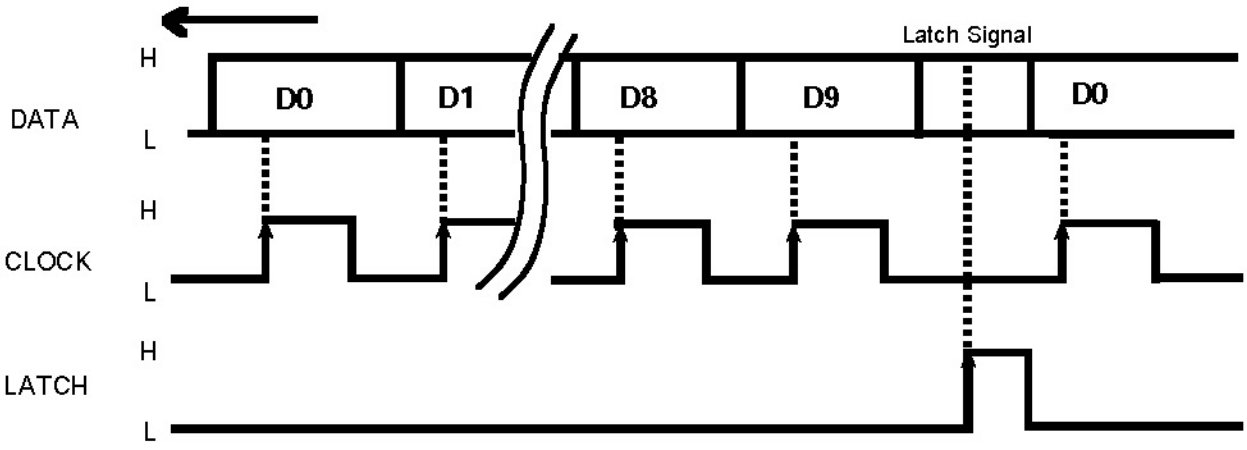

The DATA is read by rising edge of CLOCK signal,
and DATA is loaded by rising edge of LATCH signal.

CLOCK,DATA,LATCH TIMING

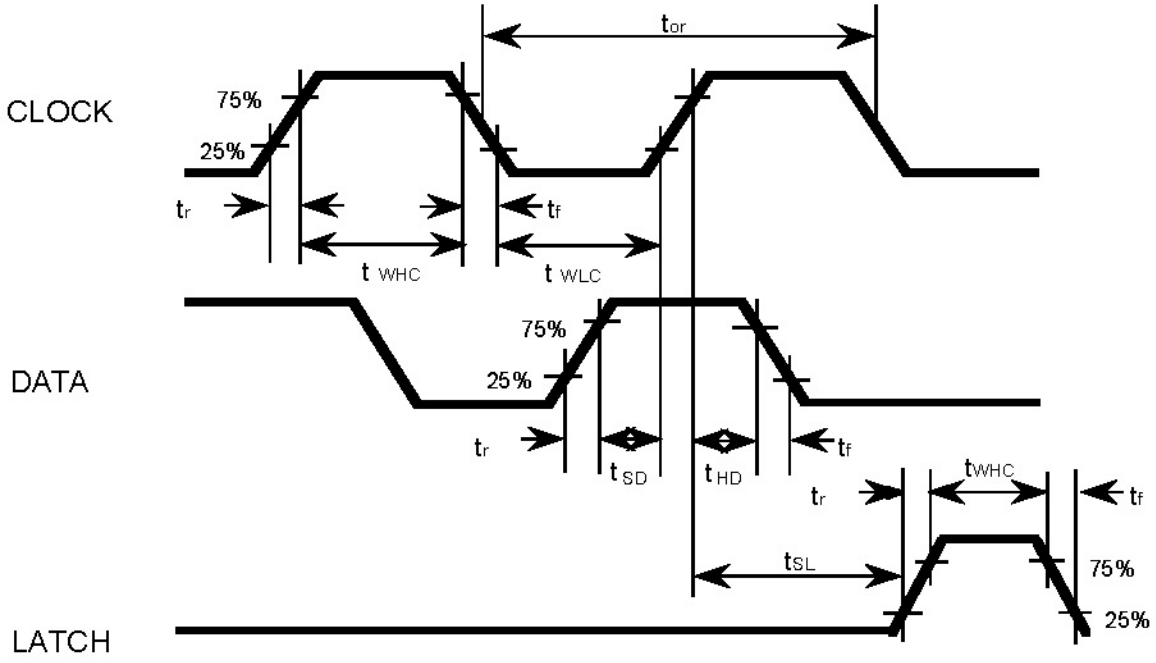

BUS LINE TIMING SPECIFICATION

SYMBOL	ITEM	SPECIFICATION Min	typ	Max	UNIT
t_{or}	Cycle time of CLOCK	4	–	–	μsec
t_{WHC}	Pulse width of CLOCK ("H" Level)	1.6	–	–	
t_{WLC}	Pulse width of CLOCK ("L" Level)	1.6	–	–	
t_r	Rise time of CLOCK,DATA,LATCH	–	–	0.4	
t_f	Fall time of CLOCK,DATA,LATCH	–	–	0.4	
t_{SD}	Set up time of DATA	0.8	–	–	
t_{HD}	Hold time of DATA	0.8	–	–	
t_{SL}	Set-up time of LATCH	1	–	–	
t_{WHL}	Pulse width of LATCH	1.6	–	–	

Data Input Format

Changing DC*,DD*,DE*,DF* data,
M61501FP can select five input formats.
(Please set all data when every power supply is applied.)

← Input direction

Input format selection slot

Fixed bit

(0)	D00	D10	D20	D30	D40	D50	D60	D70	D80	D90	DA0	DB0	DC0	DD0	DE0	DF0
	Master volume slot (all ch setting) # Refer setting code (7)						0	0	0	0	0	0	1	1	0	0
(1)	D01	D11	D21	D31	D41	D51	D61	D71	D81	D91	DA1	DB1	DC1	DD1	DE1	DF1
	Master volume slot (Lch) # Refer setting code (7)						Master volume slot (Rch) # Refer setting code (7)						0	0	0	1
(2)	D02	D12	D22	D32	D42	D52	D62	D72	D82	D92	DA2	DB2	DC2	DD2	DE2	DF2
	Master volume slot (SLch) # Refer setting code (7)						Master volume slot (SRch) # Refer setting code (7)						0	0	1	1
(3)	D03	D13	D23	D33	D43	D53	D63	D73	D83	D93	DA3	DB3	DC3	DD3	DE3	DF3
	Master volume slot (Cch) # Refer setting code (7)						Master volume slot (SWch) # Refer setting code (7)						0	1	0	1
(4)	D04	D14	D24	D34	D44	D54	D64	D74	D84	D94	DA4	DB4	DC4	DD4	DE4	DF4
	Vol. selector (Lch) 00,10: MUTE 01: Connect:A 11: Connect:B		Vol. selector (Rch) 00,10: MUTE 01: Connect:A 11: Connect:B		Vol. Selector (SLch) 00,10: MUTE 01: Connect:A 11: Connect:B		Vol. Selector (SRch) 00,10: MUTE 01: Connect:A 11: Connect:B		Vol. Selector (Cch) 00,10: MUTE 01: Connect:A 11: Connect:B		Vol. Selector (SWch) 00,10: MUTE 01: Connect:A 11: Connect:B		0	1	1	1
(5)	D05	D15	D25	D35	D45	D55	D65	D75	D85	D95	DA5	DB5	DC5	DD5	DE5	DF5
	Input select Refer setting code (9)			0	REC Output (A) (B) 0: mute 1: ON mute at power on		Input ATT 0: 0dB 1:-6dB	SW1 0:Bypass 1:DPL	SW2 0:Bypass 1:Tone	Output gain 00,10: 0dB 01: 6dB 11: 10dB		1	1	0	0	1
(6)	D06	D16	D26	D36	D46	D56	D66	D76	D86	D96	DA6	DB6	DC6	DD6	DE6	DF6
	Tone Control Bass Refer setting code (8)				Tone Control Treble Refer setting code (8)				Bass Boost 00: 0dB 01: 3dB 10: 6dB 11: 10dB		1	1	1	0	1	1

(7) Condition Code (Master Volume)

X : means data slot. L,Rch is "1", SL,SRch is "2",
and C,SWch is "3". Please refer format page6 in detail.

ATT Value	D0X	D1X	D2X	D3X	D4X	D5X
	D6X	D7X	D8X	D9X	DAX	DBX
–0dB	0	0	0	0	0	0
–1dB	1	0	0	0	0	0
–2dB	0	1	0	0	0	0
–3dB	1	1	0	0	0	0
–4dB	0	0	1	0	0	0
–5dB	1	0	1	0	0	0
–6dB	0	1	1	0	0	0
–7dB	1	1	1	0	0	0
–8dB	0	0	0	1	0	0
–9dB	1	0	0	1	0	0
–10dB	0	1	0	1	0	0
–11dB	1	1	0	1	0	0
–12dB	0	0	1	1	0	0
–13dB	1	0	1	1	0	0
–14dB	0	1	1	1	0	0
–15dB	1	1	1	1	0	0
–16dB	0	0	0	0	1	0
–17dB	1	0	0	0	1	0
–18dB	0	1	0	0	1	0
–19dB	1	1	0	0	1	0
–20dB	0	0	1	0	1	0
–21dB	1	0	1	0	1	0
–22dB	0	1	1	0	1	0
–23dB	1	1	1	0	1	0
–24dB	0	0	0	1	1	0
–25dB	1	0	0	1	1	0
–26dB	0	1	0	1	1	0
–27dB	1	1	0	1	1	0
–28dB	0	0	1	1	1	0
–29dB	1	0	1	1	1	0
–30dB	0	1	1	1	1	0
–31dB	1	1	1	1	1	0

ATT Value	D0X	D1X	D2X	D3X	D4X	D5X
	D6X	D7X	D8X	D9X	DAX	DBX
–32dB	0	0	0	0	0	1
–33dB	1	0	0	0	0	1
–34dB	0	1	0	0	0	1
–35dB	1	1	0	0	0	1
–36dB	0	0	1	0	0	1
–37dB	1	0	1	0	0	1
–38dB	0	1	1	0	0	1
–39dB	1	1	1	0	0	1
–40dB	0	0	0	1	0	1
–41dB	1	0	0	1	0	1
–42dB	0	1	0	1	0	1
–43dB	1	1	0	1	0	1
–44dB	0	0	1	1	0	1
–45dB	1	0	1	1	0	1
–46dB	0	1	1	1	0	1
–47dB	1	1	1	1	0	1
–48dB	0	0	0	0	1	1
–50dB	1	0	0	0	1	1
–52dB	0	1	0	0	1	1
–54dB	1	1	0	0	1	1
–56dB	0	0	1	0	1	1
–58dB	1	0	1	0	1	1
–60dB	0	1	1	0	1	1
–62dB	1	1	1	0	1	1
–64dB	0	0	0	1	1	1
–66dB	1	0	0	1	1	1
–68dB	0	1	0	1	1	1
–70dB	1	1	0	1	1	1
–72dB	0	0	1	1	1	1
–76dB	1	0	1	1	1	1
–80dB	0	1	1	1	1	1
–∞	1	1	1	1	1	1

(8) Condition Code (Tone Boost/Cut)

Bass Condition					
		D06	D16	D26	D36
Boost	+0 dB	0	0	0	0
	+2 dB	0	0	0	1
	+4 dB	0	0	1	0
	+6 dB	0	0	1	1
	+8 dB	0	1	0	0
	+10 dB	0	1	1	1
Cut	–0 dB	1	0	0	0
	–2 dB	1	0	0	1
	–4 dB	1	0	1	0
	–6 dB	1	0	1	1
	–8 dB	1	1	0	0
	–10 dB	1	1	1	1

Treble Condition					
		D46	D56	D66	D76
Boost	+0 dB	0	0	0	0
	+2 dB	0	0	0	1
	+4 dB	0	0	1	0
	+6 dB	0	0	1	1
	+8 dB	0	1	0	0
	+10 dB	0	1	1	1
Cut	–0 dB	1	0	0	0
	–2 dB	1	0	0	1
	–4 dB	1	0	1	0
	–6 dB	1	0	1	1
	–8 dB	1	1	0	0
	–10 dB	1	1	1	1

Please prohibit except upper data code.
No Guarantee except upper data code.

(9) Input Selector Condition Code

Selector	D05	D15	D25
A	0	0	0
B	1	0	0
C	0	1	0
D	1	1	0
E	0	0	1
F	1	0	1
G	0	1	1
mute	1	1	1

ELECTRIC CHARACTERISTICS

(Ta=25°C,AVDD=7.0V,AVSS=-7.0V,DVDD=5.0V ,f=1kHz,and bass and treble=0dB unless otherwise noted)

(1) SUPPLY VOLTAGE

ITEM	SYMBOL	CONDITION	SPECIFICATION Min	typ	Max	UNIT
Analog plus supply current	AIdd	• AVDD=7.0V, AVSS= -7.0V • measure terminal=72,73pin • no signal input	—	50	70	mA
Analog minus supply current	AIss	• AVDD=7.0V, AVSS= -7.0V • measure terminal=29pin • no signal input	-70	-50	—	mA
Digital supply current	DIdd	• DVDD= 5V • measure terminal 30pin • no signal input	—	0.3	1.2	mA

(2) I/O CHARACTERISTICS

ITEM	SYMBOL	CONDITION		SPECIFICATION Min	typ	Max	UNIT
Input resistance	Rin	74,75,76,77,78,79,2pin-35Pin 71,70,69,68,67,66,63pin-36Pin		50	100	200	KW
Maximum input voltage	VIM	14,20,26,39,45,51pin input 16,22,28,37,43,49pin output RL =10KΩ,THD=1%		3.0	4.0	—	Vrms
Output voltage	Vodc	No input signal		-0.4	0.0	0.4	V
	Vrecdc	No input signal		-0.4	0.0	0.4	V
Through gain	Gv	Vin=1Vrms,FLAT, Gain of(74,71pin)-(16,49pin)		-2.0	0	2.0	dB
Maximum attenuate value	ATT	Vo=1Vrms,16,49pin JIS-A Filter		—	-90	-80	dB
Output noise voltage	Vono	JIS-A Filter no signal,Rg=10KΩ on FLAT(pass)	Vol 0dB	—	10.0	20	μVrms
	Vrecno		Vol -∞	—	3.5	7	μVrms
Total harmonic distortion	THD	BW=400 to 30kHz Vo=0.5Vrms , RL=10KΩ		—	0.01	0.05	%
	THDrec1	BW=400 to 30kHz Vo=0.5Vrms , RL=50KΩ		—	0.01	0.05	%
	THDSWOUT	BW=400 to 30kHz Vo=0.5Vrms , RL=50KΩ		—	0.01	0.05	%
Channel crosstalk	CT	Vo=0.5Vrms , RL=10KΩ,JIS-A Rg=10KΩ		—	-80	-60	dB
	CTrec	Vo=0.5Vrms , RL=30KΩ,JIS-A Rg=10KΩ		—	-80	-60	dB

(3) TONE CONTROL CHARACTERISTICS

ITEM	SYMBOL	CONDITION		SPECIFICATION Min	typ	Max	UNIT
Tone control voltage gain Boost condition	Gboost1	0dB	f=1KHz, Vo=1Vrms, Gain from 74pin,71pin to 11pin,54pin	-0.8	0	0.8	dB
	Gboost2	2dB		1.0	2	3.0	
	Gboost3	4dB		3.0	4	5.0	dB
	Gboost4	6 dB		5.0	6	7.0	
	Gboost5	8dB		6.5	8	9.5	dB
	Gboost6	10 dB		8.0	10	12.0	
Tone control voltage gain Cut condition	Gcut1	0dB		-0.8	0	0.8	dB
	Gcut2	-2dB		3.0	-2	1.0	
	Gcut3	-4dB		-5.0	-4	-3.0	dB
	Gcut4	-6dB		-7.0	-6	-5.0	
	Gcut5	-8dB		-9.5	-8	-6.5	dB
	Gcut6	-10dB		-12.0	-10	-8.0	
Balance between channel L and R.	BALton	f=1KHz,Vo=1Vrms, 6,59pin input, 11,54pin output, Boost=+10,-10dB		-1.5	0	+1.5	dB

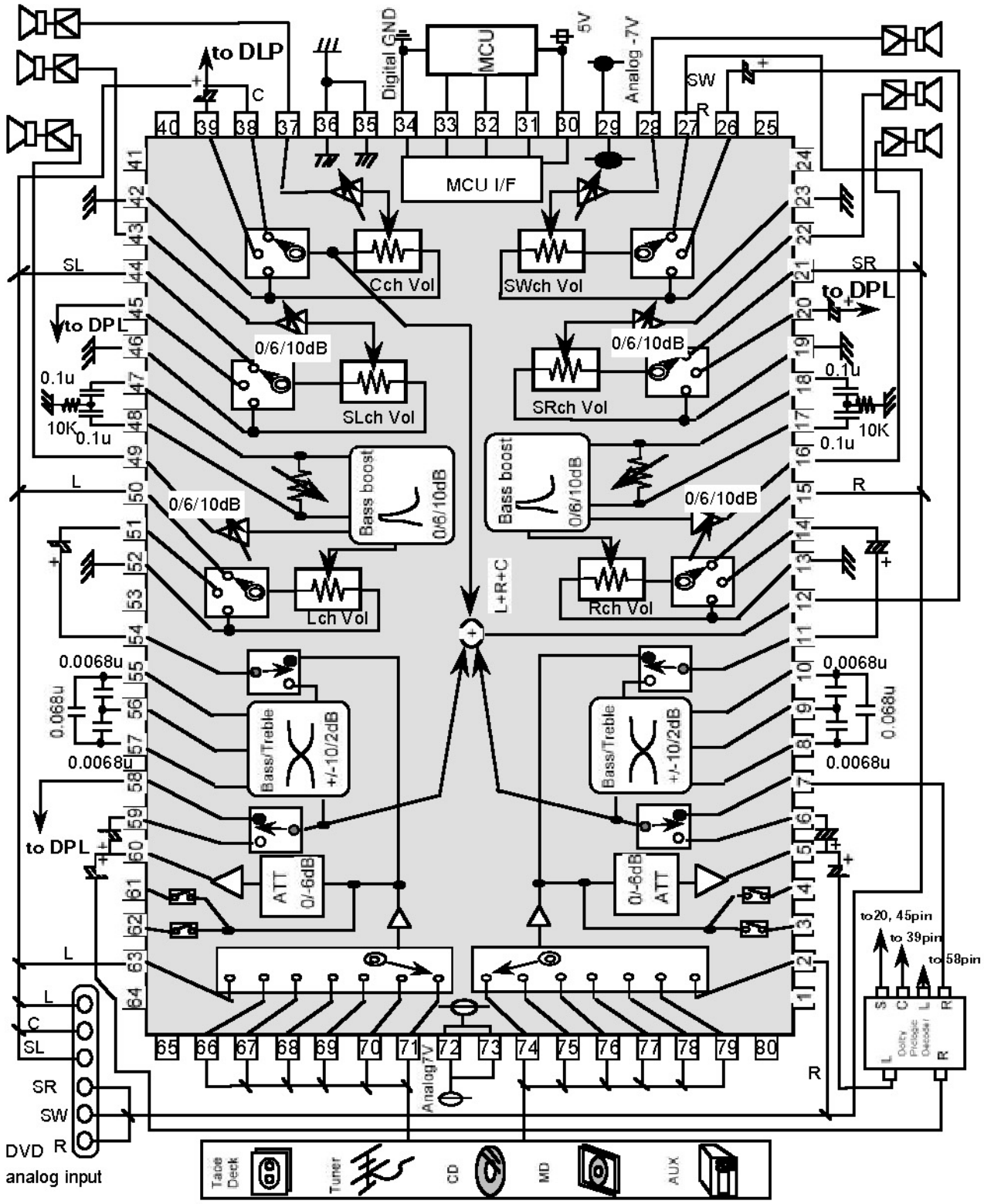
to DLP
Digital GND
MCU
5V
Analog -7V
SW
C
R
MCU I/F
Cch Vol
SWch Vol
SL
SR
to DPL
0/6/10dB
SLch Vol
SRch Vol
0.1u
10K
L
Bass boost
Lch Vol
Rch Vol
L+R+C
0.0068u
0.068u
Bass/Treble
+/-10/2dB
ATT
0/-6dB
to20, 45pin
to 39pin
to 58pin
DVD
analog input
Analog7V
Table Deck
Tuner
CD
MD
AUX