DWG. NO.	PC-11478
ISSUE	REVISIONS

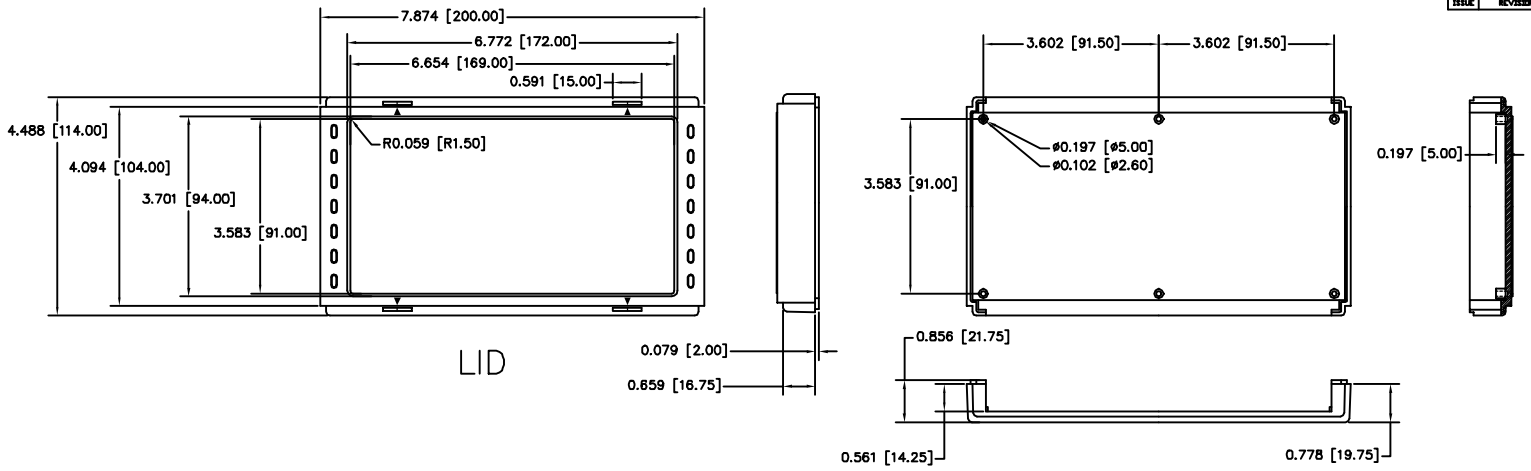

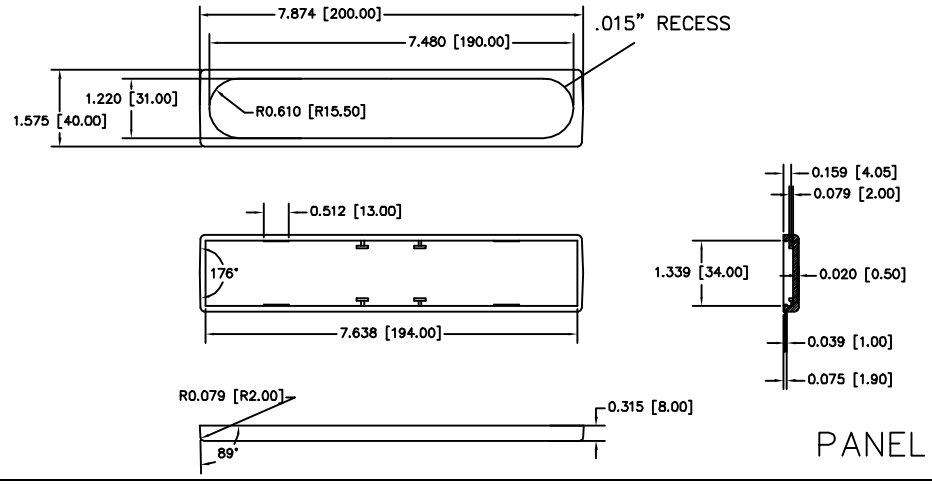

		ITEM	REQ'D.	PART NO.	DESCRIPTION
	TOLERANCES: ±.030 BETWEEN HOLE CENTERS ±.005 FROM SHOULDER EDGE ±.030 FROM A JOINT SURFACE ±.063 BETWEEN ASSEMBLED SURFACES UNLESS OTHERWISE SPECIFIED	DRAT.	AS NOTED	SCALE	NAME PLASTICASE STYLE I 7.87 X 4.76 X 1.57
		FINISH	AS NOTED	BUD INDUSTRIES, INC. WILLOUGHBY, OHIO	
		DR. RD	10-13-08		
		CH.			
QTY.	USED ON	APP.			

DWG. NO.	PC-11478
ISSUE	REVISIONS

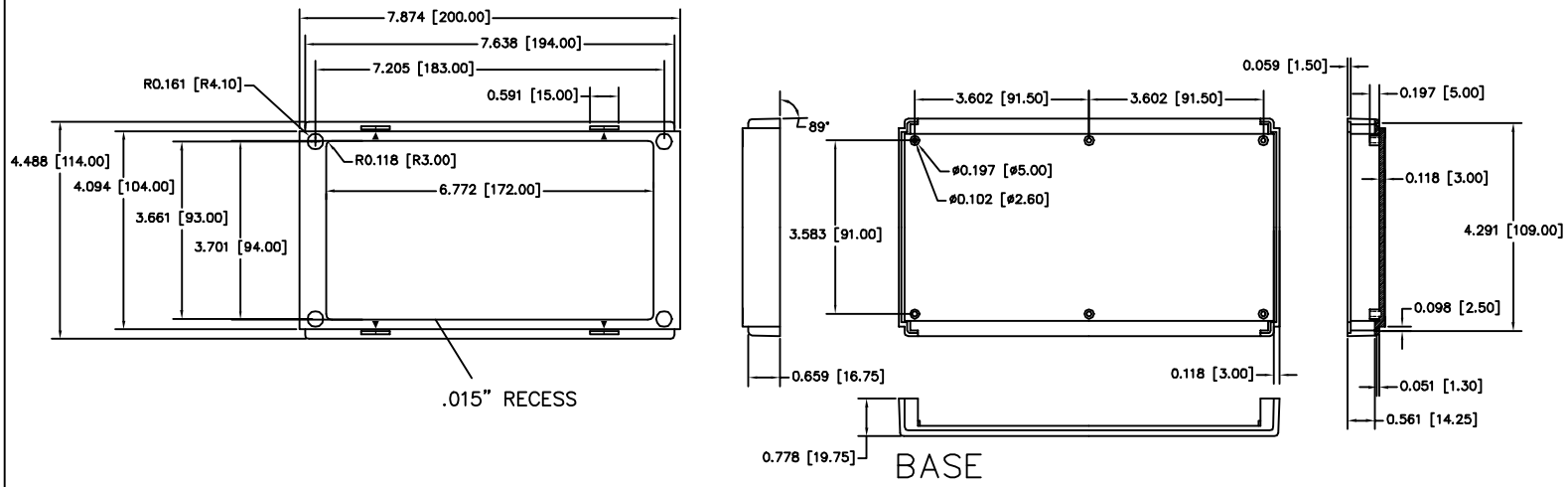

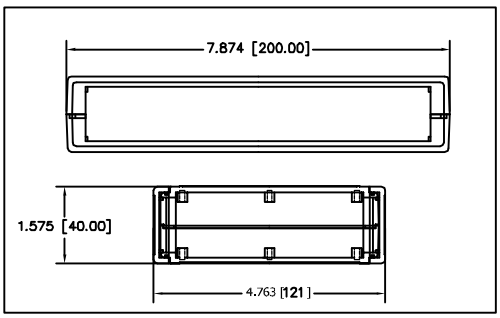

MATERIAL : HIGH IMPACT UL- 94-HB ABS .
COLOR:
LID & BASE ARE MOLDED IN LIGHT GREY COLOR
FRONT & END PANELS
ARE MOLDED IN DARK GREY COLOR
FINISH:
FRONT & END PANELS ARE SMOOTH WITH TEXTURE ONLY IN THE RECESS AREA.
LID & BASE ARE SMOOTH WITH TEXTURE ONLY IN OUTSIDE RAISED AREA.
SIX (6) INTERNAL BOSSES ON BASE & LID ARE
AVAILABLE FOR PCB ASSEMBLY. USE M2.5 OR
#4 STD SHEET METAL SCREWS.
ALL DIMENSIONAL TOLERANCES ARE +/-.015
RUBBER FEET PART NUMBER ——— AVAILABLE AS ACCESSORY

		ITEM	REQ'D.	PART NO.	DESCRIPTION
	TOLERANCES: ±.030 BETWEEN HOLE CENTERS ±.005 FROM SHOULDER EDGE ±.030 FROM A JOINT SURFACE ±.063 BETWEEN ASSEMBLED SURFACES UNLESS OTHERWISE SPECIFIED	DRAT.	AS NOTED	SCALE	NAME PLASTICASE STYLE I 7.87 X 4.76 X 1.57
		FINISH	AS NOTED	BUD INDUSTRIES, INC. WILLOUGHBY, OHIO	
		DR. RD	10-13-08		
		CH.			
QTY.	USED ON	APP.			

DWG. NO.	PC-11478