© 2025 TE Connectivity. All Rights Reserved.

REVISIONS					
P	LTR	DESCRIPTION	DATE	DWN	APVD
	A	SEE ECN : EG00-1317-00	06JUN2000	EP	AS
	A1	SEE ECN : EG00-1413-00	07JUL2000	HT	AS
	A2	EG00-0265-01	25JAN2001	EH	AS
	A3	REVISED PER ECO-11-005294	30APR11	RK	HMR
	C	ECR-25-247638	13JUN2025	TP	PT

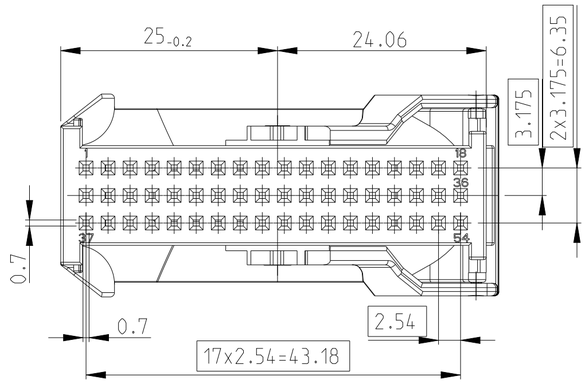

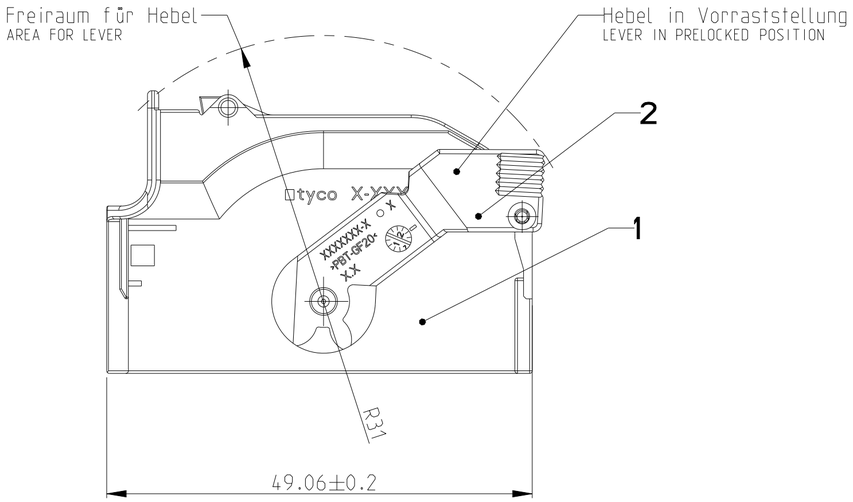

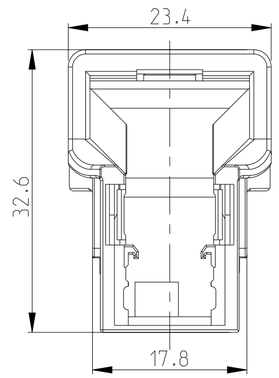

Bemerkungen
NOTES

1 Massgebend ist der deutsche Text
ONLY THE GERMAN LANGUAGE VERSION SHALL BE BINDING

2 Formteilungsgrat max. 0.3 zulaessig
MOULD BURRS MAX. 0.3 PERMITTED

3 Zulaessiger Regeneratanteil max.25%
RECYCLED MATERIAL MAX 25% PERMISSIBLE

4 Einzelheiten der Ausfuehrung bleiben dem Hersteller ueberlassen
DETAILS OF DESIGN ARE LEFT TO MANUFACTURER

5 Verpackung: Schuettgut
PACKAGING: LOOSE PIECE

6 Toleranzen mittig ueber Nennmass nach DIN 16901-130
TOLERANCES UNLESS OTHERWISE SPECIFIED CENTRIC TO NOMINAL DIMENSION DIN 16901-130

7 1- -2 wie gezeichnet
AS SHOWN

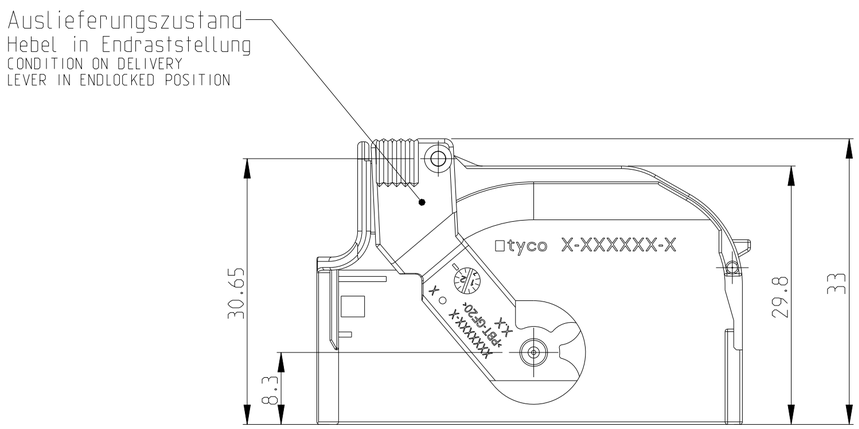

1:1

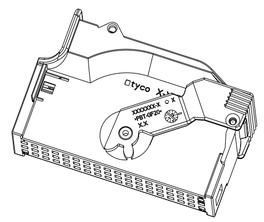

1-1355928-2	C	1	PBT-GF20	natur/NATURAL	Hebel/LEVER	2
		1	PBT-GF20	schwarz/BLACK	Abdeckkappe/SHIELD	1
TE CONNECTIVITY PART NO.	REV.	STK. QTY.	MATERIAL	SURFCE / COLOUR	DESCRIPTION	ITEM NO

THIS DRAWING IS A CONTROLLED DOCUMENT.

DIMENSIONS: mm

TOLERANCES UNLESS OTHERWISE SPECIFIED:
0 PLC ±
1 PLC ±
2 PLC ±
3 PLC ±
4 PLC ±
ANGLES ±1°
6

MATERIAL: SEE TABLE material_2

FINISH: SEE TABLE finish_spec_2

DWN E.Palmie 06JUN2000
CHK A.Schmid 07JUN2000
APVD –
PRODUCT SPEC 108-18730
APPLICATION SPEC 114-18138
WEIGHT –

tyco Electronics TE — TE Connectivity

NAME: SHIELD, 54 POS. Abdeckkappe, 54-polig –

SIZE A2 | CAGE CODE 00779 | DRAWING NO C-1355928 | RESTRICTED TO –

CUSTOMER DRAWING | SCALE 2:1 | SHEET 1 OF 1 | REV C

1471-9 (3/13)