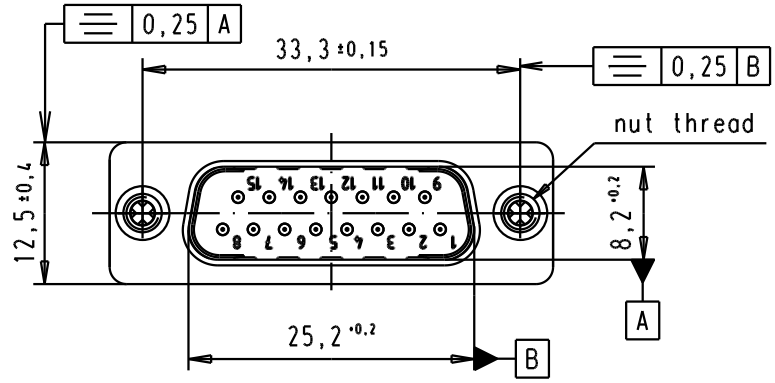

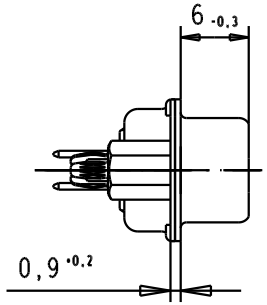

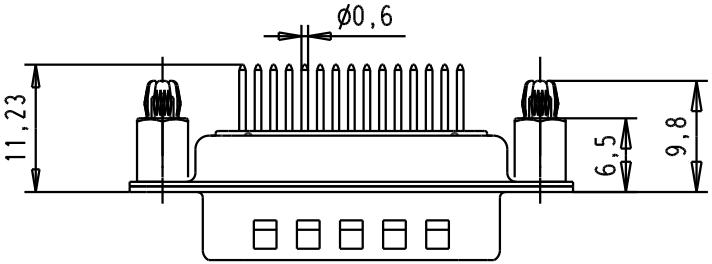

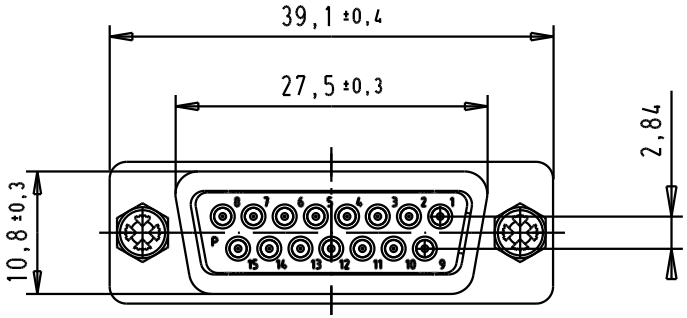

PCB Layout, Component side

PCB thickness 1,6 mm

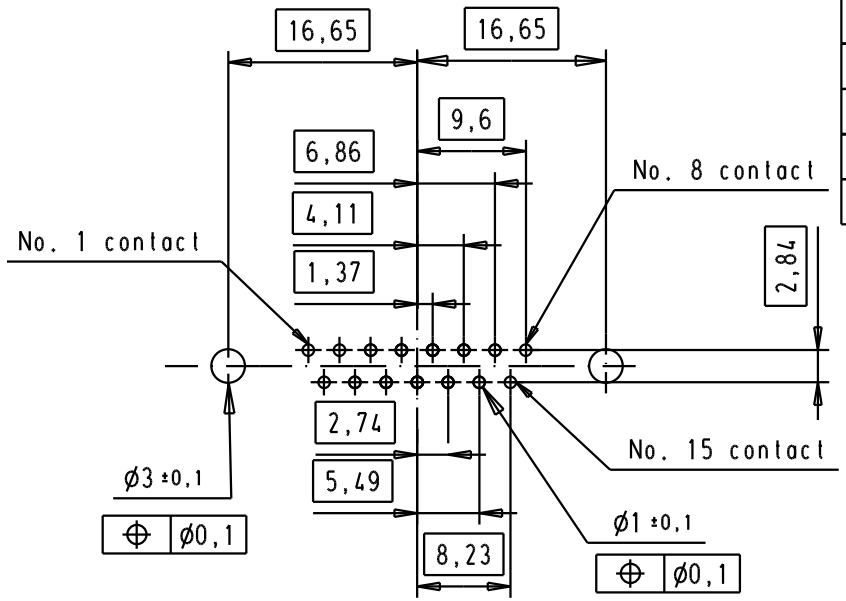

SPECIFICATION

Mating Cycles	500
Filter type	C
Capacitance	1000pf ±20%
Working Voltage	100v
Current Rating	7.5A
Insulation Resistance	>1GΩ

FREQUENCY (MHz)	ATTENUATION (dB)
5	1dB
10	3dB
50	12dB
100	20dB
500	34dB
1000	30dB

							Dat.	Name			
						Detail.	8-JUL-02	CV	All Dim. in mm Orig. Size DIN A 4	D-Sub, male, straight, 15 Poles, solder pins, tin plated shell with dimples , spacer nuts and board-locks	Ma?Mstab/ Scale 1.5:1
						Insp.					
						Stand.					
09642227236	M3		33079	29/08/05	JMDR	HARTING EURL F-95972 Paris				TB 0964222723x	Blatt/ Page 2/3
09642227235	UNC 4-40		31058	8-JUL-02	CV						
Part number	Nut thread		Mod.	Dat.	Name					Sub.	