DRW NO.	SH	REV
C951-400C-500	1	B

ZONE	REV	SCR NUMBER	DESCRIPTION	BY	DATE	APPROVED
ALL	A	AASY-7QUL9B.VER01	NEW RELEASE	HCL-GM	04/16/2009	A.ASTBURY
	B	AASY-868QBB.VER01	ADDED XTALIC PN'S	HCL-GM	06/10/2010	D.SMITH

951 - 4 X 0 C - X X X

- 951 — XCede BACKPLANE MODULE MALE STANDARD LOAD
- 4 — 4 PAIR
- X — LETTER
- 0 — 0 (ZERO)
- C — 6-POSITION
- X — NUMBER
- X — NUMBER
- X — PLATING (4)

LETTER										
LEFT POLARIZING GUIDANCE (SEE SHEET 3)	N	J (NO KEY)	A	B	C	D	E	F	G	H
	NO KEY NO GUIDEPIN	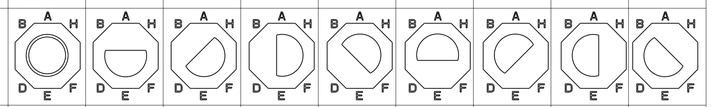								
RIGHT POLARIZING GUIDANCE (SEE SHEET 4)	Z	Y (NO KEY)	P	Q	R	S	T	U	V	W
	NO KEY NO GUIDEPIN	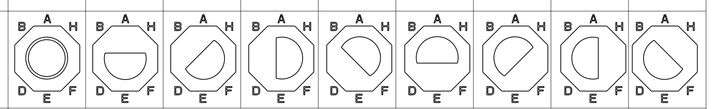								
OPEN (SEE SHEET 2)		O (ZERO)								
LEFT WALL (SEE SHEET 5)		L								
RIGHT WALL (SEE SHEET 6)		M								
TWO WALL (SEE SHEET 7)		1								

NUMBER	PIN STYLE, HEIGHT
0	GUIDE PIN MACHINED, 31.6mm / NONE
1	GUIDE PIN ROLLED, 31.6mm
4	GUIDE PIN MACHINED, 25.7mm
5	GUIDE PIN ROLLED, 25.7mm

NUMBER	SIGNAL & LG. GROUND WIPE LENGTH, COMPLIANT PIN SIZE
1	2 mm WIPE SIGNAL, 4 mm WIPE LG GND, Ø0.0217" DRILL
2	3 mm WIPE SIGNAL, 4 mm WIPE LG GND, Ø0.0217" DRILL
3	2 mm WIPE SIGNAL, 4 mm WIPE LG GND, Ø0.0177" DRILL
4	3 mm WIPE SIGNAL, 4 mm WIPE LG GND, Ø0.0177" DRILL
5	2 mm WIPE SIGNAL, 3 mm WIPE LG GND, Ø0.0217" DRILL
6	3 mm WIPE SIGNAL, 3 mm WIPE LG GND, Ø0.0217" DRILL
7	2 mm WIPE SIGNAL, 3 mm WIPE LG GND, Ø0.0177" DRILL
8	3 mm WIPE SIGNAL, 3 mm WIPE LG GND, Ø0.0177" DRILL

PLATING (4)	
LETTER	DESCRIPTION
B	Ni SULFAMATE, STANDARD GOLD, LEADED
C	Ni SULFAMATE, HIGH GOLD, LEADED
D	Ni SULFAMATE, STANDARD GOLD, LEAD-FREE
E	Ni SULFAMATE, HIGH GOLD, LEAD-FREE
F	NANO Ni, STANDARD GOLD, LEADED
G	NANO Ni, HIGH GOLD, LEADED
H	NANO Ni, STANDARD GOLD, LEAD-FREE
J	NANO Ni, HIGH GOLD, LEAD-FREE

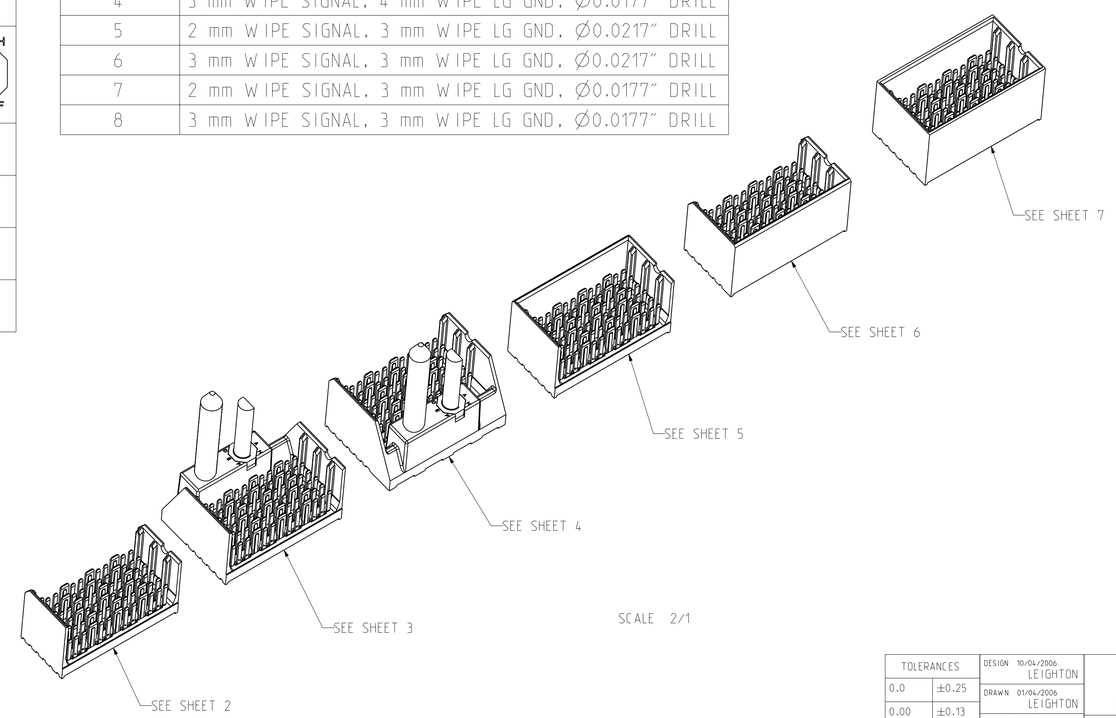

SCALE 2/1

NOTES:

1. REFER TO TB-2150 FOR XCede PRODUCT SPECIFICATIONS.
2. NOTCH DESIGNATES "ROW A" SIDE OF SHROUD. NOTCH FEATURE ON OPPOSITE SIDE FROM PART MARKING.
3. PART MARKING AS FOLLOWS:
   LINE 1: "ATCS" AND DATECODE (ATCS YYWW).
   LINE 2: MODULE PART NUMBER (951-####-###).
   LINE 3: WORK ORDER NUMBER (###*######).
   WHERE "*" DENOTES MANUFACTURING LOCATION.
4. PLATING THICKNESS OF SIGNAL CONTACT AND GROUND CONTACT IS DETERMINED BY PLATING CODE. SEE PART NUMBER TREE SHEET 1.
5. REPAIR PROCEDURE FOR MODULE. SEE TB-2210.
6. SEE TB-2149 FOR ROUTING GUIDELINES & PTH REQ'S.
7. SEE DOC C190-1001-000 FOR TOOLING KEEPOUT ZONES.
8. BACKPLANE DATUM REFERENCE.
9. OPTIONAL HOLE/MOUNTING SCREW LOCATION FOR GROUNDED PIN OR ADDITIONAL GUIDE PIN SUPPORT. REFER TO TB-2211 FOR PROPER GUIDE PIN SELECTION AND DRAWING C942-4010-000 FOR OPTIONAL HOLE DETAILS. ONLY APPLIES FOR MACHINED GUIDE PIN APPLICATIONS.
10. DIMENSIONS APPLY FOR BOTH COMPLIANT PIN SIZES.

TOLERANCES	
0.0	±0.25
0.00	±0.13
0.000	± -
ANGLES	± 3°

UNLESS OTHERWISE SPECIFIED DIMENSIONS ARE IN MM.DECIMAL MARKER IS PERIOD

INTERPRET PER ASME Y14.5M

CODE IDENT 31413

CUSTOMER USE DRAWING

DESIGN 10/04/2006 LEIGHTON
DRAWN 01/04/2006 LEIGHTON
CHK 10/05/2006 A.PFAHNL
APVD 10/06/2006 A.PFAHNL

Amphenol TCS
A Division of Amphenol Corporation
200 Innovative Way, Nashua, NH 03062 603.879.3000

TITLE BACKPLANE MODULES, VERTICAL MALE HEADER
XCede, 4 PAIR 6 POSITION

PART NO.	REV
SEE PN TREE SHEET 1	N/A
DRAWING NO. C951-400C-500	B
ProE ASSEM C951-4--BP4 C951-400C-500 .drw	14.7 B.0

SIZE D | SCALE 4/1 | SHEET 1 OF 8

DRW NO. C951-400C-500 SH 1 REV B

DRW NO.	SH	REV
C951-400C-500	2	B

ZONE	REV	SCR NUMBER	DESCRIPTION	BY	DATE	APPROVED
			SEE SHEET 1			

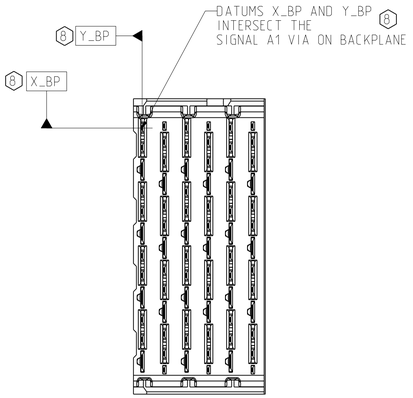

OPEN BACKPLANE MODULE DIMENSION

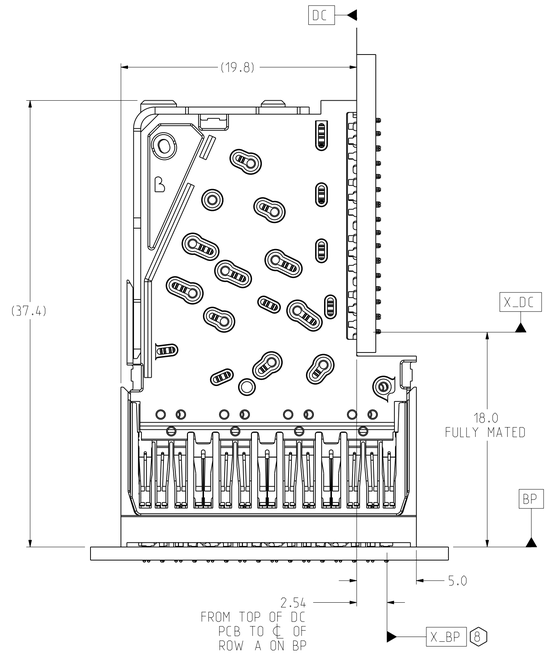

CONNECTOR REFERENCE
SCALE 4/1

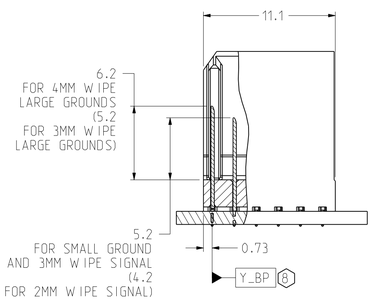

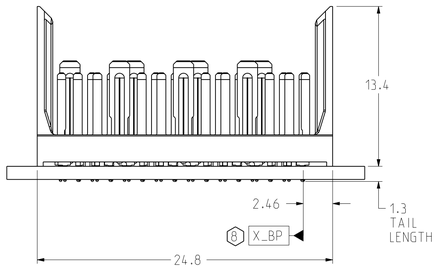

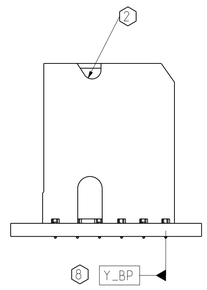

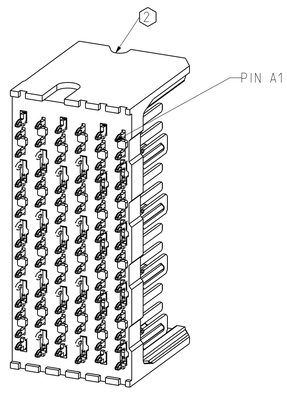

ISOMETRIC VIEW
SCALE 4/1

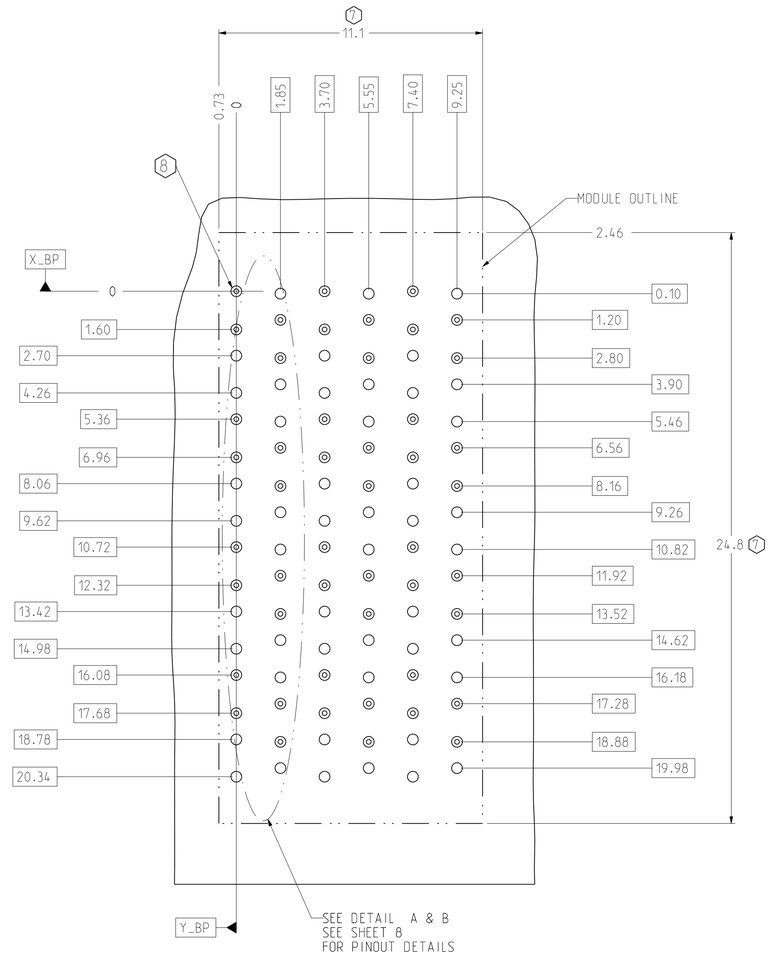

BP HOLE PATTERN
COMPONENT SIDE
SCALE 8/1

OPEN BACKPLANE FOOTPRINT

TOLERANCES	
0.0	±0.25
0.00	±0.13
0.000	± -
ANGLES	± 3°

UNLESS OTHERWISE SPECIFIED DIMENSIONS ARE IN MM.DECIMAL MARKER IS PERIOD

INTERPRET PER ASME Y14.5M

CODE IDENT 31413

CUSTOMER USE DRAWING

DESIGN 10/04/2006 LEIGHTON
DRAWN 01/04/2006 LEIGHTON
CHK 10/05/2006 A.PFAHNL
APVD 10/06/2006 A.PFAHNL

Amphenol TCS
A Division of Amphenol Corporation
200 Innovative Way, Nashua, NH 03062 603.879.3000

TITLE
BACKPLANE MODULES, VERTICAL MALE HEADER
XCede: 4 PAIR 6 POSITION

PART NO.	REV
SEE PN TREE SHEET 1	N/A
DRAWING NO. C951-400C-500	B
ProE ASSEM C951-4--BP4 C951-400C-500 .drw	14.7 B.0

SIZE D | SCALE 4/1 | SHEET 2 OF 8

DRW NO. C951-400C-500 SH 2 REV B

DRW NO.	SH	REV
C951-400C-500	3	B

ZONE	REV	SCR NUMBER	DESCRIPTION	BY	DATE	APPROVED
			SEE SHEET 1			

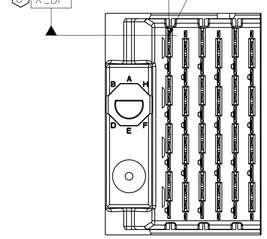

LEFT POLARIZING/GUIDE
BACKPLANE MODULE DIMENSION

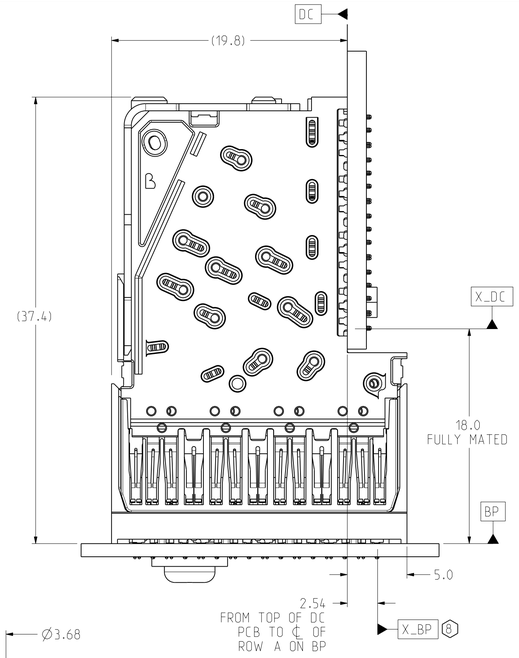

CONNECTOR REFERENCE
SCALE 4/1

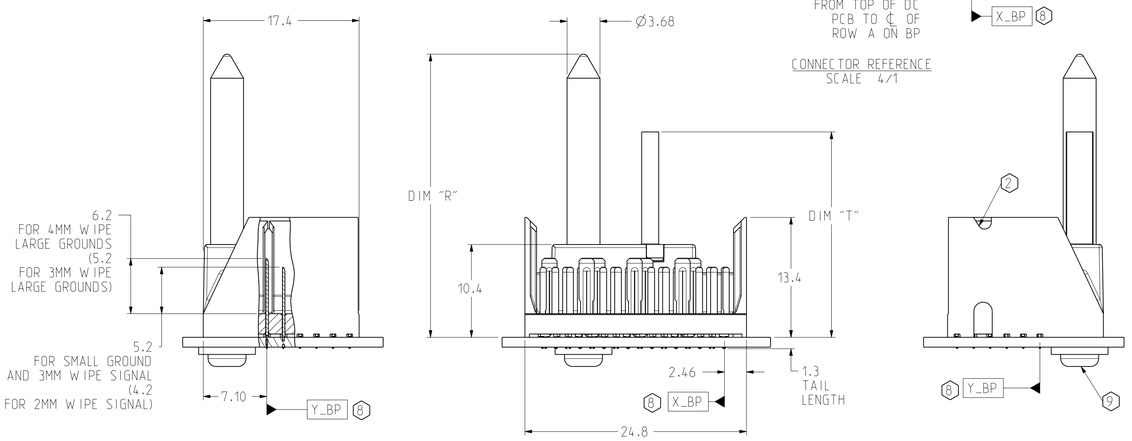

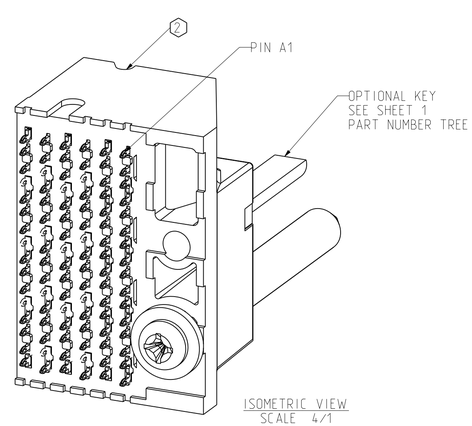

ISOMETRIC VIEW
SCALE 4/1

PART NUMBER	DIM "R"	DIM "T"
951-4X0C-X**0**X 951-4X0C-X**1**X	31.6	23.0
951-4X0C-X**4**X 951-4X0C-X**5**X	25.7	20.2

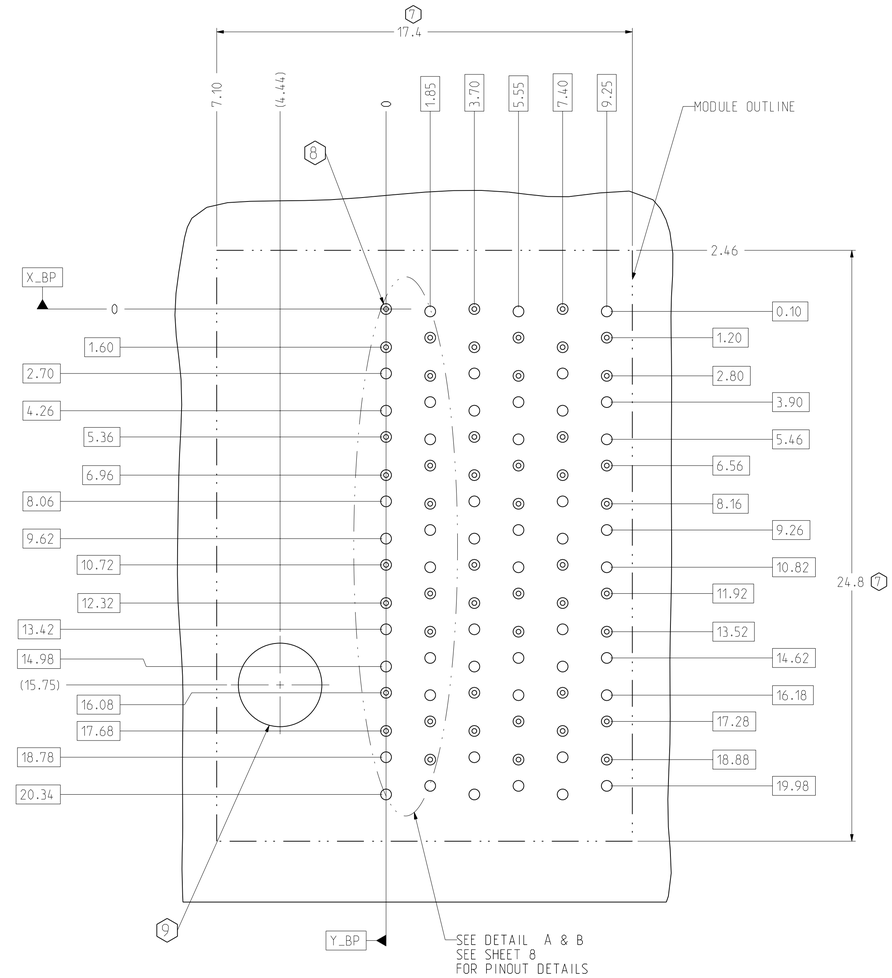

BP HOLE PATTERN
COMPONENT SIDE
SCALE 8/1

LEFT POLARIZING/GUIDE
BACKPLANE FOOTPRINT

TOLERANCES	
0.0	±0.25
0.00	±0.13
0.000	± -
ANGLES	± 3°

UNLESS OTHERWISE SPECIFIED DIMENSIONS ARE IN MM.DECIMAL MARKER IS PERIOD

INTERPRET PER ASME Y14.5M

CODE IDENT 31413

CUSTOMER USE DRAWING

DESIGN 10/04/2006 LEIGHTON
DRAWN 01/04/2006 LEIGHTON
CHK 10/05/2006 A.PFAHNL
APVD 10/06/2006 A.PFAHNL

Amphenol TCS
A Division of Amphenol Corporation
200 Innovative Way, Nashua, NH 03062 603.879.3000

TITLE
BACKPLANE MODULES, VERTICAL MALE HEADER
XCede, 4 PAIR 6 POSITION

PART NO. SEE PN TREE SHEET 1 — REV N/A
DRAWING NO. C951-400C-500 — REV B
ProE ASSEM C951-4--BP4 C951-400C-500.drw — 14.7 B.0

SIZE D | SCALE 4/1 | SHEET 3 OF 8

DRW NO. C951-400C-500 SH 3 REV B

DRW NO.	SH	REV
C951-400C-500	4	B

ZONE	REV	SCR NUMBER	DESCRIPTION	BY	DATE	APPROVED
			SEE SHEET 1			

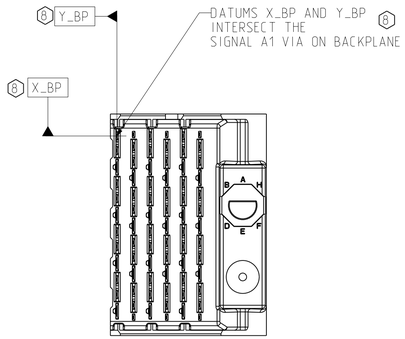

RIGHT POLARIZING/GUIDE
BACKPLANE MODULE DIMENSION

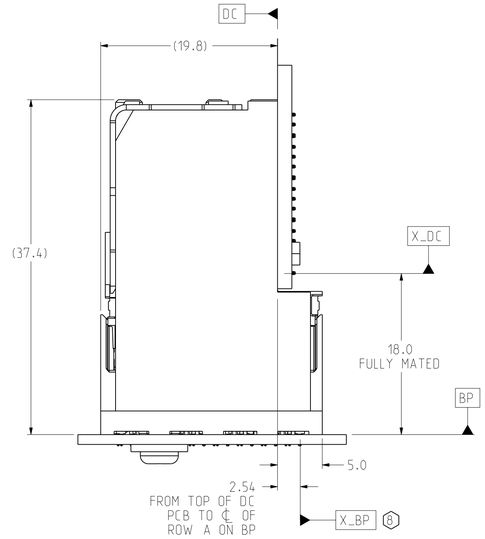

CONNECTOR REFERENCE
SCALE 3/1

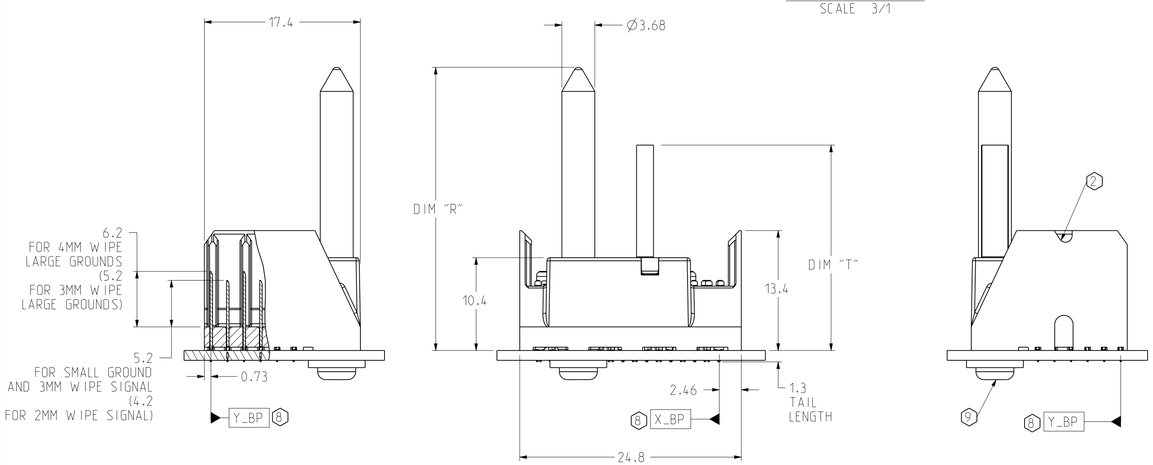

PART NUMBER	DIM "R"	DIM "T"
951-4X0C-X **0** X 951-4X0C-X **1** X	31.6	23.0
951-4X0C-X **4** X 951-4X0C-X **5** X	25.7	20.2

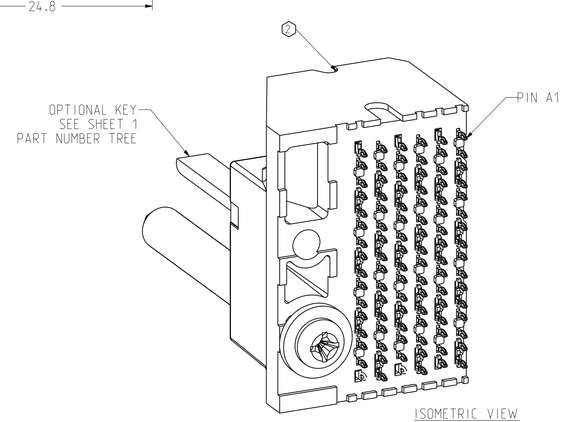

ISOMETRIC VIEW
SCALE 4/1

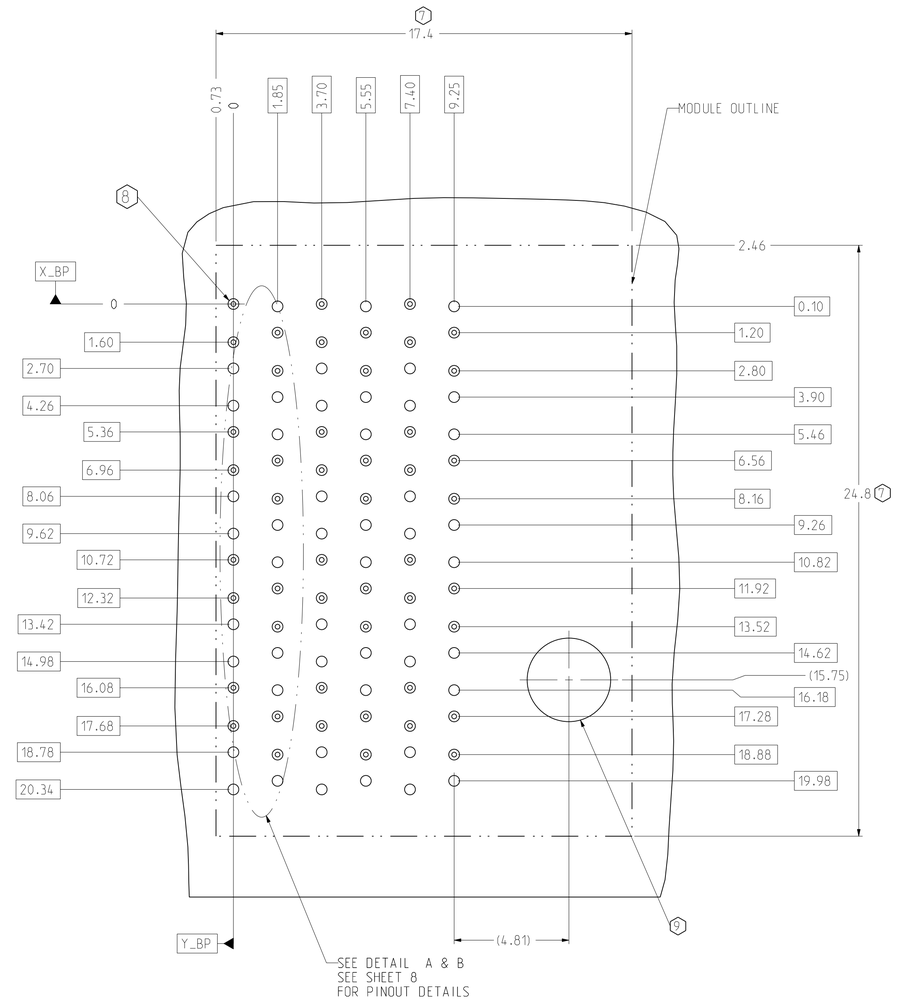

BP HOLE PATTERN
COMPONENT SIDE
SCALE 8/1

RIGHT POLARIZING/GUIDE
BACKPLANE FOOTPRINT

TOLERANCES	
0.0	±0.25
0.00	±0.13
0.000	± -
ANGLES	± 3°

UNLESS OTHERWISE SPECIFIED DIMENSIONS ARE IN MM.DECIMAL MARKER IS PERIOD

INTERPRET PER ASME Y14.5M

CODE IDENT 31413

CUSTOMER USE DRAWING

DESIGN 10/04/2006 LEIGHTON
DRAWN 01/04/2006 LEIGHTON
CHK 10/05/2006 A.PFAHNL
APVD 10/06/2006 A.PFAHNL

Amphenol TCS
A Division of Amphenol Corporation
200 Innovative Way, Nashua, NH 03062 603.879.3000

TITLE
BACKPLANE MODULES, VERTICAL MALE HEADER
XCede, 4 PAIR 6 POSITION

PART NO.	REV
SEE PN TREE SHEET 1	N/A
DRAWING NO. C951-400C-500	B
ProE ASSEM C951-4--BP4 C951-400C-500 .drw	14.7 B.0

SIZE D | SCALE 3/1 | SHEET 4 OF 8

DRW NO. C951-400C-500 SH 4 REV B

DRW NO.	SH	REV
C951-400C-500	5	B

ZONE	REV	SCR NUMBER	DESCRIPTION	BY	DATE	APPROVED
			SEE SHEET 1			

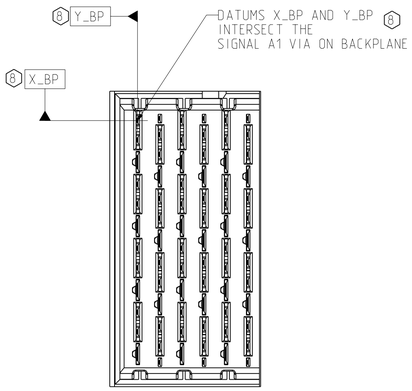

LEFT WALL BACKPLANE MODULE DIMENSION

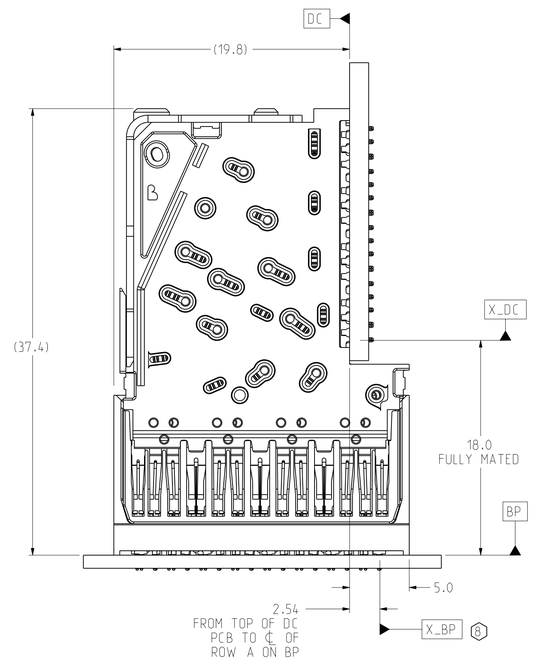

CONNECTOR REFERENCE
SCALE 4/1

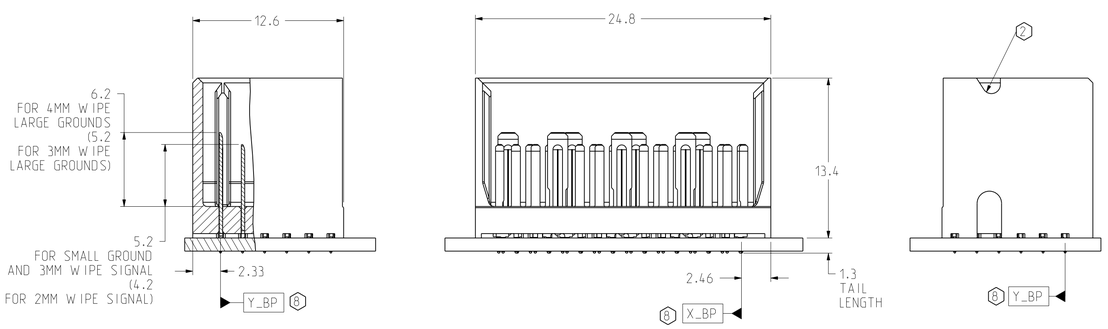

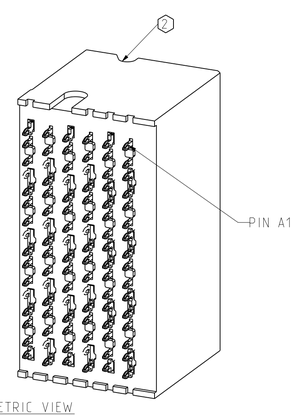

ISOMETRIC VIEW
SCALE 4/1

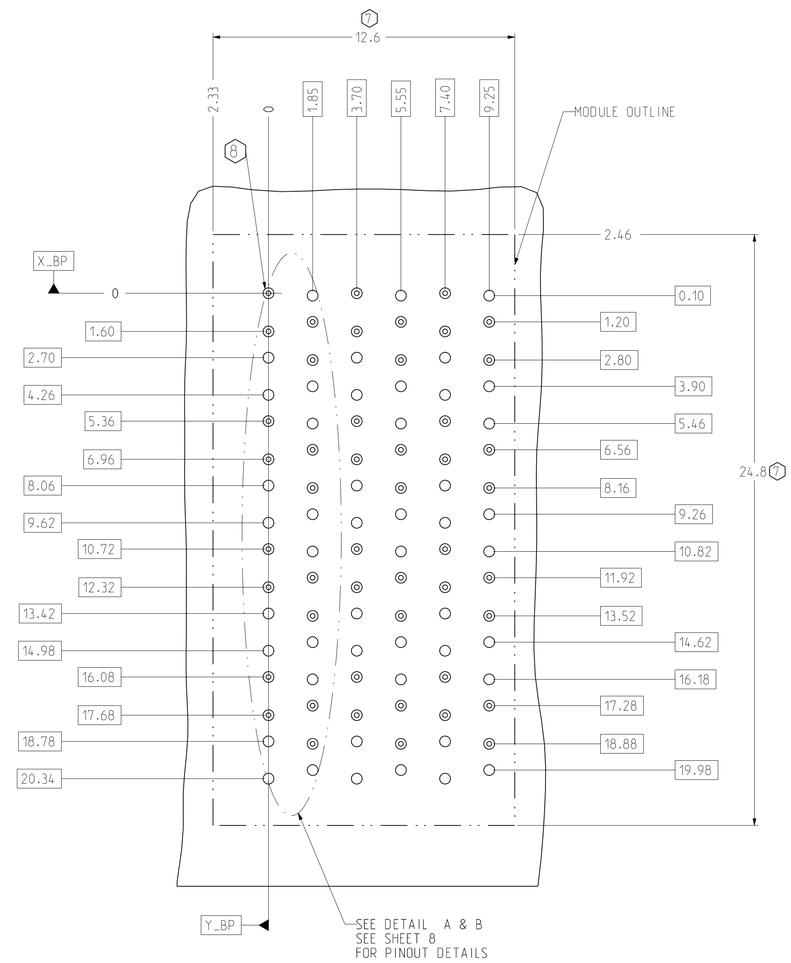

BP HOLE PATTERN
COMPONENT SIDE
SCALE 8/1

LEFT WALL BACKPLANE FOOTPRINT

TOLERANCES	
0.0	±0.25
0.00	±0.13
0.000	± -
ANGLES	± 3°

UNLESS OTHERWISE SPECIFIED DIMENSIONS ARE IN MM.DECIMAL MARKER IS PERIOD

INTERPRET PER ASME Y14.5M

CODE IDENT 31413

CUSTOMER USE DRAWING

DESIGN 10/04/2006 LEIGHTON
DRAWN 01/04/2006 LEIGHTON
CHK 10/05/2006 A.PFAHNL
APVD 10/06/2006 A.PFAHNL

Amphenol TCS
A Division of Amphenol Corporation
200 Innovative Way, Nashua, NH 03062 603.879.3000

TITLE
BACKPLANE MODULES. VERTICAL MALE HEADER
XCede. 4 PAIR 6 POSITION

PART NO. SEE PN TREE SHEET 1 — REV N/A
DRAWING NO. C951-400C-500 — REV B
ProE ASSEM C951-4--BP4 C951-400C-500 .drw — 14.7 B.0
SIZE D — SCALE 4/1 — SHEET 5 OF 8

DRW NO. C951-400C-500 SH 5 REV B

DRW NO.	SH	REV
C951-400C-500	6	B

ZONE	REV	SCR NUMBER	DESCRIPTION	BY	DATE	APPROVED
			SEE SHEET 1			

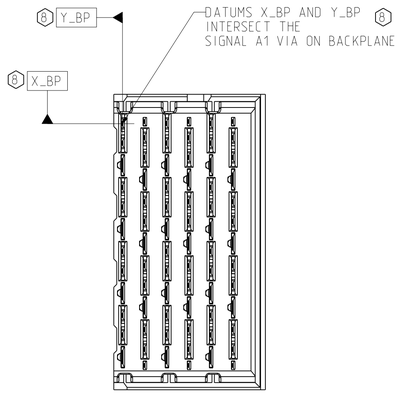

RIGHT WALL BACKPLANE MODULE DIMENSION

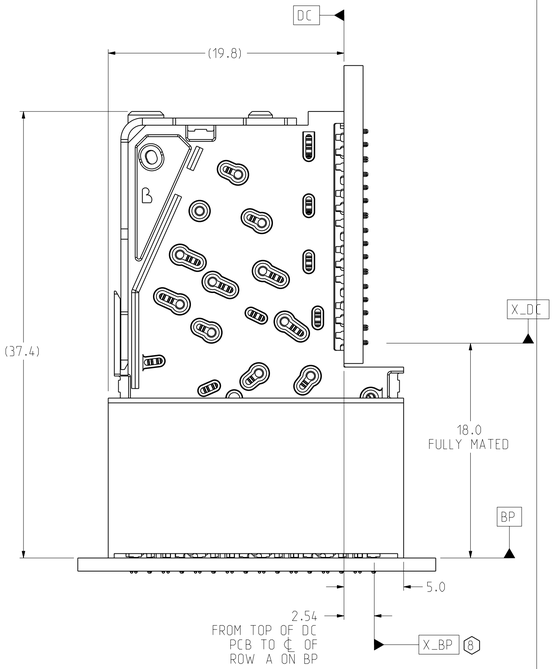

CONNECTOR REFERENCE
SCALE 4/1

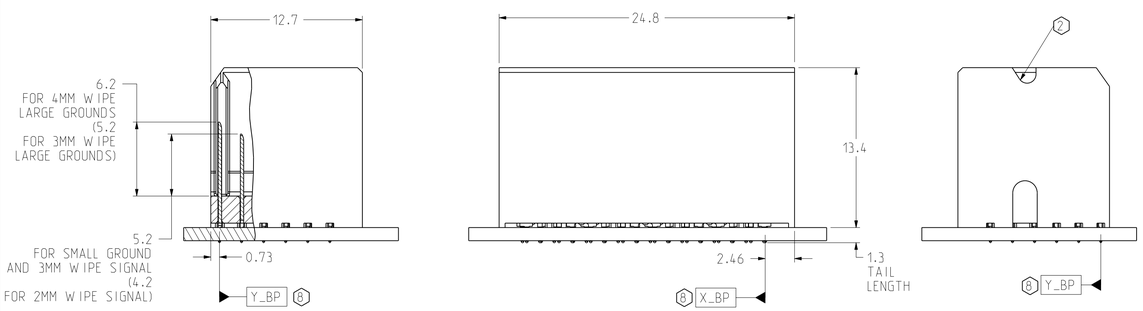

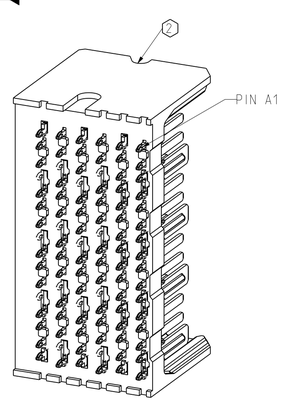

ISOMETRIC VIEW
SCALE 4/1

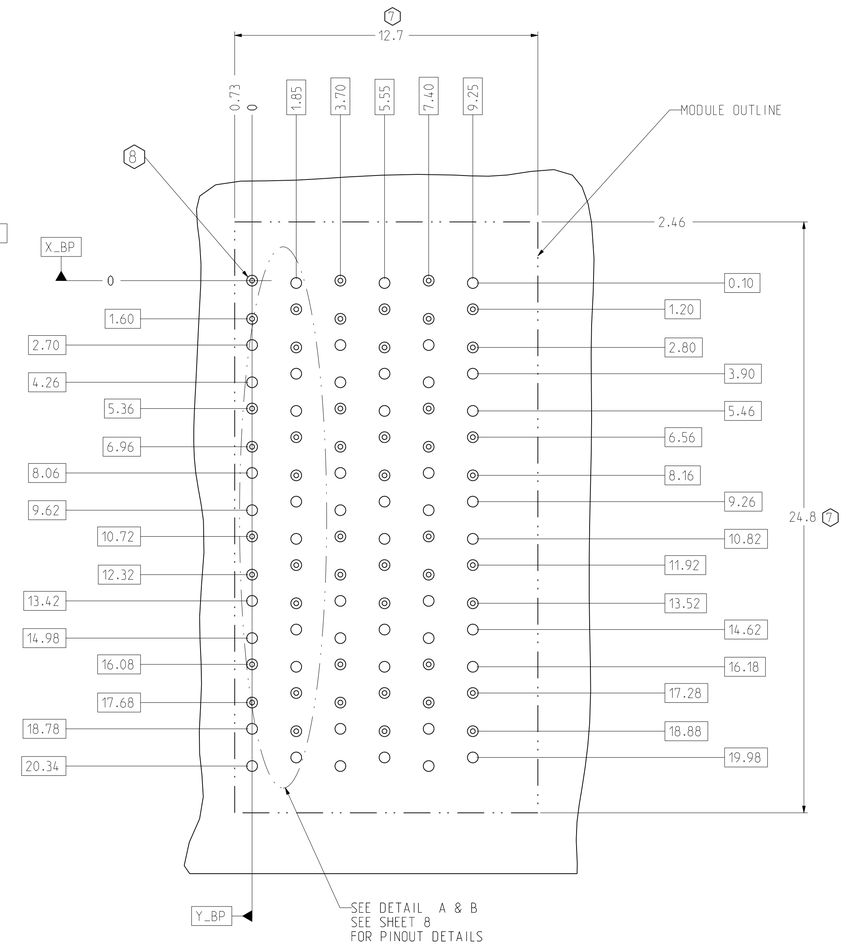

BP HOLE PATTERN
COMPONENT SIDE
SCALE 8/1

RIGHT WALL BACKPLANE FOOTPRINT

TOLERANCES	
0.0	±0.25
0.00	±0.13
0.000	± -
ANGLES	± 3°

UNLESS OTHERWISE SPECIFIED DIMENSIONS ARE IN MM.DECIMAL MARKER IS PERIOD

INTERPRET PER ASME Y14.5M

CODE IDENT 31413

CUSTOMER USE DRAWING

DESIGN 10/04/2006 LEIGHTON
DRAWN 01/04/2006 LEIGHTON
CHK 10/05/2006 A.PFAHNL
APVD 10/06/2006 A.PFAHNL

Amphenol TCS
A Division of Amphenol Corporation
200 Innovative Way, Nashua, NH 03062 603.879.3000

TITLE
BACKPLANE MODULES, VERTICAL MALE HEADER
XCede: 4 PAIR 6 POSITION

PART NO.	REV
SEE PN TREE SHEET 1	N/A
DRAWING NO. C951-400C-500	B
ProE ASSEM C951-4--BP4 C951-400C-500 .drw	14.7 B.0

SIZE D | SCALE 4/1 | SHEET 6 OF 8

DRW NO. C951-400C-500 SH 6 REV B

DRW NO.	SH	REV
C951-400C-500	7	B

ZONE	REV	SCR NUMBER	DESCRIPTION	BY	DATE	APPROVED
			SEE SHEET 1			

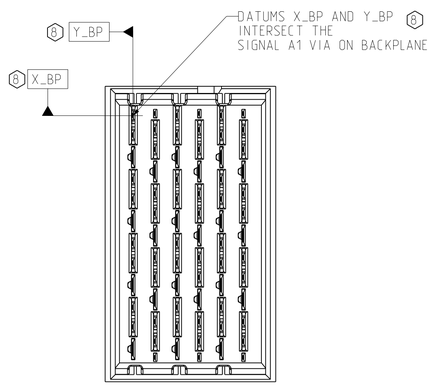

TWO WALL BACKPLANE MODULE DIMENSION

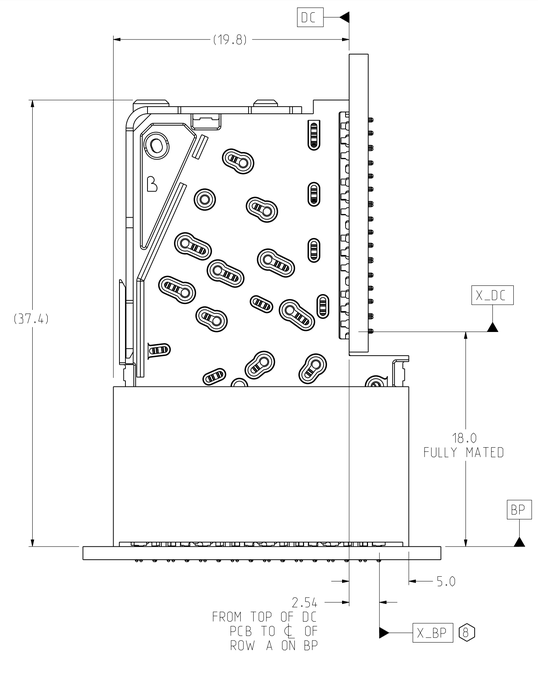

CONNECTOR REFERENCE
SCALE 4/1

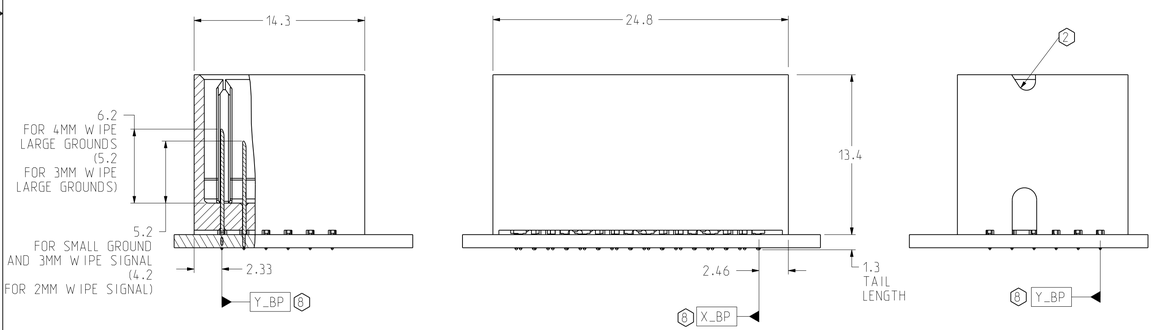

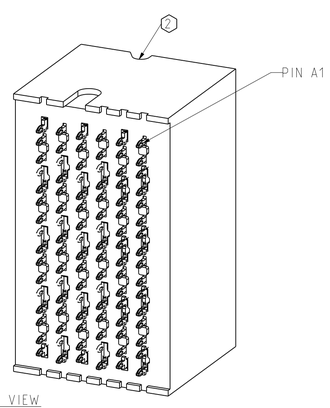

ISOMETRIC VIEW
SCALE 4/1

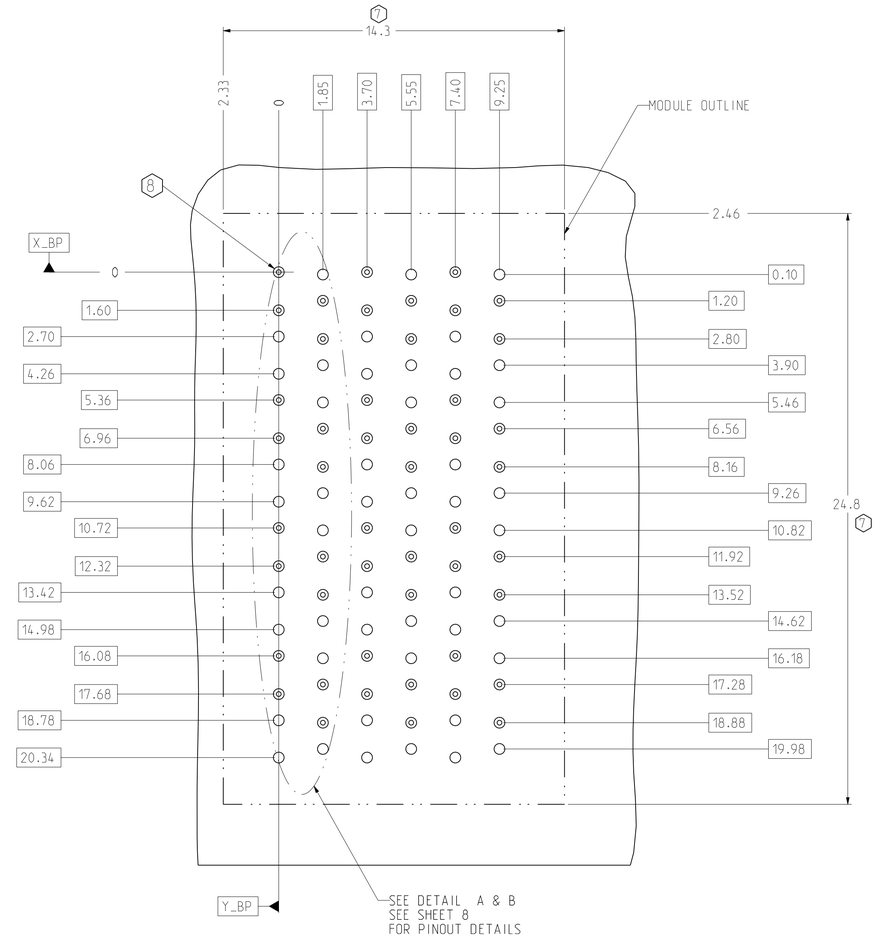

BP HOLE PATTERN
COMPONENT SIDE
SCALE 8/1

TWO WALL BACKPLANE FOOTPRINT

TOLERANCES	
0.0	±0.25
0.00	±0.13
0.000	± -
ANGLES	± 3°

UNLESS OTHERWISE SPECIFIED DIMENSIONS ARE IN MM.DECIMAL MARKER IS PERIOD

INTERPRET PER ASME Y14.5M

CODE IDENT 31413

CUSTOMER USE DRAWING

DESIGN 10/04/2006 LEIGHTON
DRAWN 01/04/2006 LEIGHTON
CHK 10/05/2006 A.PFAHNL
APVD 10/06/2006 A.PFAHNL

Amphenol TCS
A Division of Amphenol Corporation
200 Innovative Way, Nashua, NH 03062 603.879.3000

TITLE
BACKPLANE MODULES. VERTICAL MALE HEADER
XCede. 4 PAIR 6 POSITION

PART NO.	REV
SEE PN TREE SHEET 1	N/A
DRAWING NO. C951-400C-500	B
ProE ASSEM C951-4--BP4 / C951-400C-500 .drw	14.7 / B.0

SIZE D | SCALE 4/1 | SHEET 7 OF 8

DRW NO. C951-400C-500 SH 7 REV B

ZONE	REV	SCR NUMBER	DESCRIPTION	BY	DATE	APPROVED
			SEE SHEET 1			

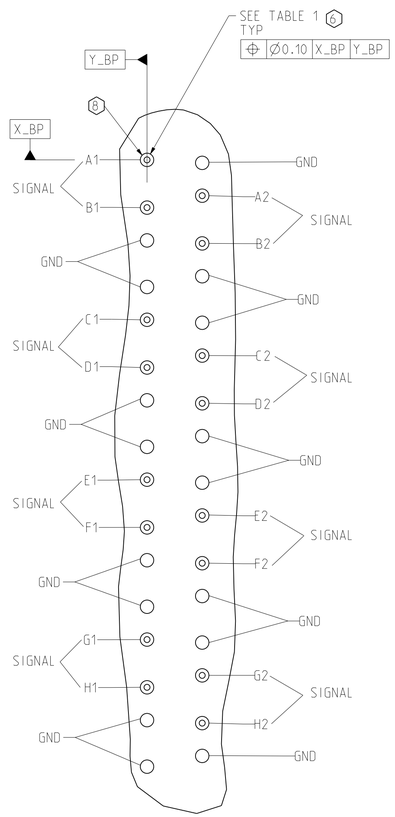

DETAIL A
HSD PINOUTS
SCALE 10/1

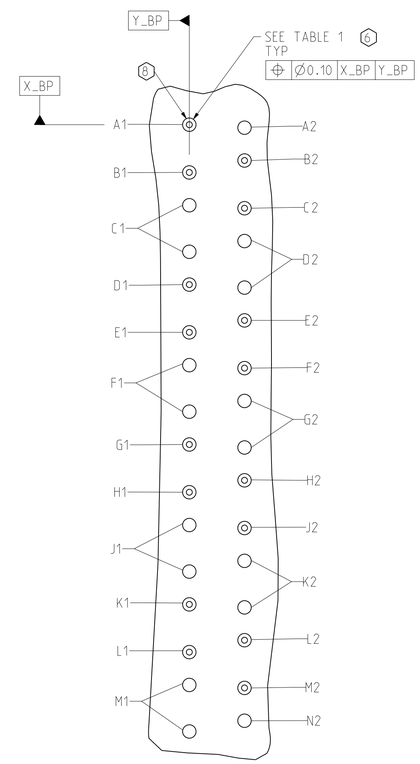

DETAIL B
LC PINOUTS
SCALE 10/1

TABLE 1 (6)		
	COMPLIANT PIN DRILL Ø0.0217"	COMPLIANT PIN DRILL Ø0.0177"
PTH	Ø0.45±0.05	Ø0.36±0.05
DRILL	Ø0.55 [0.0217"]	Ø0.45 [0.0177"]
PAD	Ø0.85	Ø0.75

TOLERANCES	
0.0	±0.25
0.00	±0.13
0.000	± -
ANGLES	± 3°

UNLESS OTHERWISE SPECIFIED DIMENSIONS ARE IN MM. DECIMAL MARKER IS PERIOD

INTERPRET PER ASME Y14.5M

CODE IDENT 31413

CUSTOMER USE DRAWING

DESIGN 10/04/2006 LEIGHTON
DRAWN 01/04/2006 LEIGHTON
CHK 10/05/2006 A.PFAHNL
APVD 10/06/2006 A.PFAHNL

Amphenol TCS
A Division of Amphenol Corporation
200 Innovative Way, Nashua, NH 03062 603.879.3000

TITLE BACKPLANE MODULES, VERTICAL MALE HEADER
XCede, 4 PAIR 6 POSITION

PART NO. SEE PN TREE SHEET 1 REV N/A
DRAWING NO. C951-400C-500 REV B
ProE ASSEM C951-4--BP4 C951-400C-500 .drw 14.7 B.0
SIZE D SCALE 4/1 SHEET 8 OF 8

DRW NO. C951-400C-500 SH 8 REV B