ROHS COMPLIANT

PRODUCT DATA DRAWING

REVISION HISTORY			
REV	DESCRIPTION	DATE	APPROVED
B	DCN 39878	06/13	STW
C	DCN 40210	12/13	STW

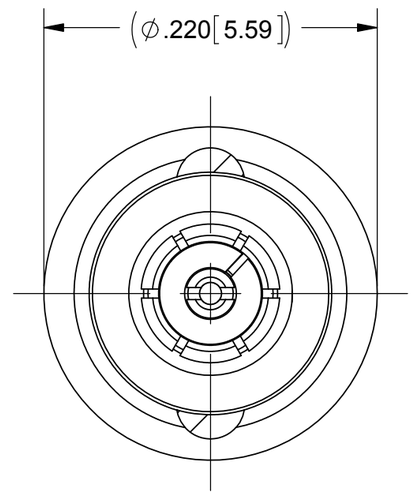

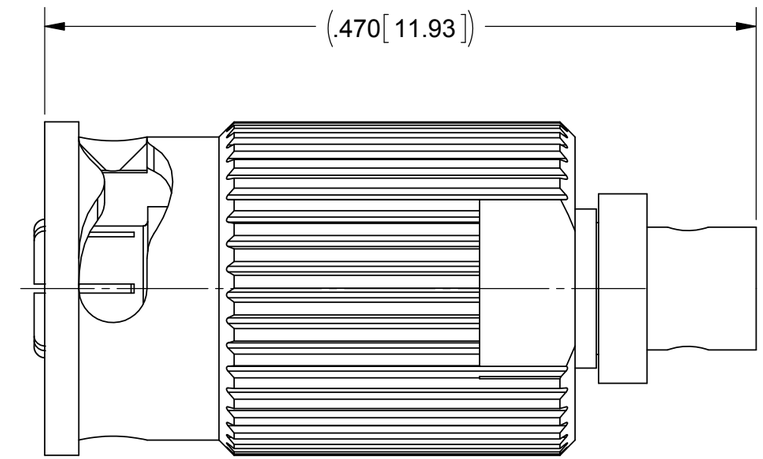

MATERIAL:

BODY & CONTACT:	BERYLLIUM COPPER PER ASTM B196, ALLOY No. UNS C17300, TD04
FERRULE:	BRASS PER ASTM B16, ALLOY UNS No. C36000
INSULATOR:	PTFE PER ASTM D1710, TYPE I, GRADE 1, CLASS B
SPRING:	STAINLESS STEEL PER ASTM A313
QUARTER BACK NUT:	PASSIVATED PER AMS-2700.

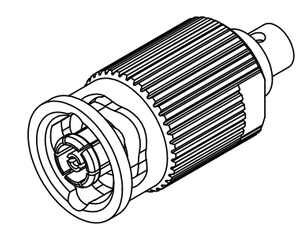

FINISH:

BODY, FERRULE & CONTACT:	GOLD PER ASTM B488, TYPE II, CODE C, CLASS 1.27, OVER NICKEL PER AMS-QQ-N-290, CLASS 1, .00005" MIN.
QUARTER BACK NUT & SPRING:	PASSIVATED PER AMS 2700

PERFORMANCE:

IMPEDANCE:	50 OHMS
FREQ. RANGE:	DC TO 65.0 GHz

MATERIAL: SEE NOTES

FINISH: SEE NOTES

SURFACE AREA: N/A

PROPRIETARY

THE INFORMATION CONTAINED IN THIS DRAWING IS THE SOLE PROPERTY OF SV MICROWAVE, INC. ANY REPRODUCTION IN PART OR AS A WHOLE WITHOUT THE WRITTEN PERMISSION OF SV MICROWAVE, INC IS PROHIBITED.

DIMENSIONS ARE IN INCHES TOLERANCES:

FRACTIONAL: ±1/64 ANGULAR: X° ±1°0'
X°X' ±15'

DECIMAL: .X ±.030
.XX ±.010
.XXX ±.005

INTERPRET DIMENSIONS AND TOLERANCES PER ASME Y14.5M - 1994

THIRD ANGLE PROJECTION

UNLESS OTHERWISE SPECIFIED

1) ALL DIMENSIONS ARE IN INCHES [MILLIMETERS]
2) ALL DIMENSIONS ARE AFTER PLATING.
3) BREAK CORNERS & EDGES .005 R. MAX.
4) CHAM. 1ST & LAST THREADS.
5) SURFACE ROUGHNESS 63µ MIL-STD-10.
6) DIA.'S ON COMMON CENTERS TO BE CONCENTRIC WITHIN .005 T.I.R.
7) REMOVE ALL BURRS

DRAWN: NHR 09/20/12

CHECKED:

APPROVED:

SV Microwave, Inc.
2400 Centrepark West Drive, Suite 100
West Palm Beach, FL 33409

TITLE: SMPM JACK W/ QUARTER BACK NUT FOR Ø.047 S.R. CABLE

SIZE	CAGE CODE	DWG. NO.
B	95077	3221-60003

SCALE: 10:1

SHEET 1 OF 1