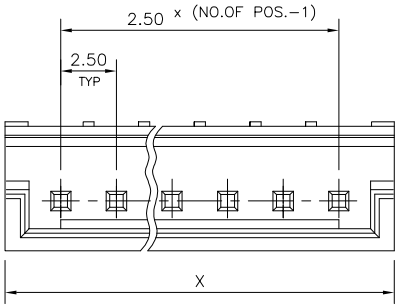


NOTE

MATERIAL:

1.HOUSING : PBT 15% GLASS FILLED UL94 V0 BLACK
THE HOUSING WILL WITHSTAND EXPOSURE TO 260-265°C FOR 3.5 SECONDS IN A WAVESOLDERING APPLICATION.

2.PIN : BRASS

PLATING :

③ 2 MICRON MIN SnPb OVER 1.27 MICRON MIN. NICKEL UNDER COAT (FOR LEADED VERSION)
2 MICRON MIN MATTE TIN OVER 1.27 MICRON MIN. NICKEL UNDER COAT(FOR LEAD FREE VERSION)

④ 0.5 MICRON MIN Au OVER 1.27 MICRON MIN. NICKEL.

⑤ 0.1 MICRON MIN Au OVER 1.27 MICRON MIN. NICKEL.

⑥ 0.3 MICRON MIN Au OVER 1.27 MICRON MIN. NICKEL.

7. POLARIZED HEADER SPECIFIED POSITION DOSE NOT HAVE PIN AS SHOWN

* 67094-097 .....4TH FROM RIGHT

* 67094-098 .....2ND FROM RIGHT

LEFT RIGHT

8. OPERATING TEMPERATURE : -25°C TO +85°C
9. MECHANICAL PERFORMANCE
DURABILITY (MATING CYCLES)
GOLD : 50
TIN-LEAD : 20
CONTACT RETENTION - 1.5 KG
10. ELECTRICAL PERFORMANCE
WITHSTANDING VOLTAGE : 750 V
INSULATION RESISTANCE : 500M Ωmin
CURRENT RATING : 2 amp DC
CONTACT RESISTANCE : 20m Ωmax

| PART NUMBER | POS. | DIMN. X | PLATING |
|---|---|---|---|
| 67094-098 / 67094-098LF | 18 | 47.5 | ③ |
| 67094-097 / 67094-097LF | 14 | 37.5 | |
| 67094-096 / 67094-096LF | 8 | 22.5 | |
| 67094-095 / 67094-095LF | 20 | 52.5 | ⑥ |
| 67094-094 / 67094-094LF | 19 | 50.0 | |
| 67094-093 / 67094-093LF | 18 | 47.5 | |
| 67094-092 / 67094-092LF | 17 | 45.0 | |
| 67094-091 / 67094-091LF | 16 | 42.5 | |
| 67094-090 / 67094-090LF | 15 | 40.0 | |

| PART NUMBER | POS. | DIMN. X | PLATING |
|---|---|---|---|
| 67094-089 / 67094-089LF | 14 | 37.5 | ⑥ |
| 67094-088 / 67094-088LF | 13 | 35.0 | |
| 67094-087 / 67094-087LF | 12 | 32.5 | |
| 67094-086 / 67094-086LF | 11 | 30.0 | |
| 67094-085 / 67094-085LF | 10 | 27.5 | |
| 67094-084 / 67094-084LF | 9 | 25.0 | |
| 67094-083 / 67094-083LF | 8 | 22.5 | |
| 67094-082 / 67094-082LF | 7 | 20.0 | |
| 67094-081 / 67094-081LF | 6 | 17.5 | |
| 67094-080 / 67094-080LF | 5 | 15.0 | |
| 67094-079 / 67094-079LF | 4 | 12.5 | |
| 67094-078 / 67094-078LF | 3 | 10.0 | |
| 67094-077 / 67094-077LF | 2 | 7.5 | |
| 67094-076 / 67094-076LF | 20 | 52.5 | ④ |
| 67094-075 / 67094-075LF | 19 | 50.0 | |
| 67094-074 / 67094-074LF | 18 | 47.5 | |
| 67094-073 / 67094-073LF | 17 | 45.0 | |
| 67094-072 / 67094-072LF | 16 | 42.5 | |
| 67094-071 / 67094-071LF | 15 | 40.0 | |
| 67094-070 / 67094-070LF | 14 | 37.5 | |
| 67094-069 / 67094-069LF | 13 | 35.0 | |
| 67094-068 / 67094-068LF | 12 | 32.5 | |
| 67094-067 / 67094-067LF | 11 | 30.0 | |
| 67094-066 / 67094-066LF | 9 | 25.0 | |
| 67094-065 / 67094-065LF | 7 | 20.0 | |
| 67094-064 / 67094-064LF | 6 | 17.5 | |

| PART NUMBER | POS. | DIMN. X | PLATING |
|---|---|---|---|
| 67094-063 / 67094-063LF | 5 | 15.0 | ④ |
| 67094-062 / 67094-062LF | 6 | 17.5 | ⑤ |
| 67094-061 / 67094-061LF | 10 | 27.5 | ④ |
| 67094-060 / 67094-060LF | 8 | 22.5 | |
| 67094-059 / 67094-059LF | 4 | 12.5 | |
| 67094-058 / 67094-058LF | 3 | 10.0 | |
| 67094-057 / 67094-057LF | 2 | 7.5 | |
| 67094-020 / 67094-020LF | 20 | 52.5 | ③ |
| 67094-019 / 67094-019LF | 19 | 50.0 | |
| 67094-018 / 67094-018LF | 18 | 47.5 | |
| 67094-017 / 67094-017LF | 17 | 45.0 | |
| 67094-016 / 67094-016LF | 16 | 42.5 | |
| 67094-015 / 67094-015LF | 15 | 40.0 | |
| 67094-014 / 67094-014LF | 14 | 37.5 | |
| 67094-013 / 67094-013LF | 13 | 35.0 | |
| 67094-012 / 67094-012LF | 12 | 32.5 | |
| 67094-011 / 67094-011LF | 11 | 30.0 | |
| 67094-010 / 67094-010LF | 10 | 27.5 | |
| 67094-009 / 67094-009LF | 9 | 25.0 | |
| 67094-008 / 67094-008LF | 8 | 22.5 | |
| 67094-007 / 67094-007LF | 7 | 20.0 | |
| 67094-006 / 67094-006LF | 6 | 17.5 | |
| 67094-005 / 67094-005LF | 5 | 15.0 | |
| 67094-004 / 67094-004LF | 4 | 12.5 | |
| 67094-003 / 67094-003LF | 3 | 10.0 | |
| 67094-002 / 67094-002LF | 2 | 7.5 | |

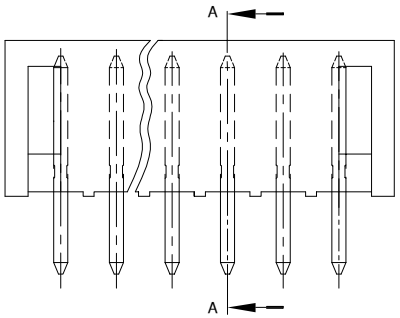


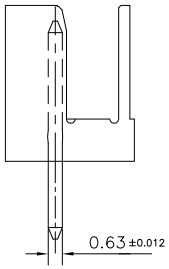


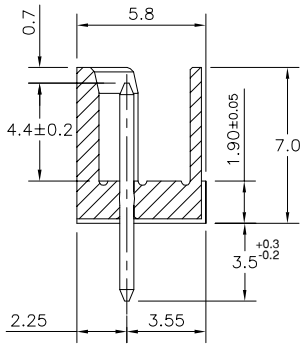


SECTION-AA

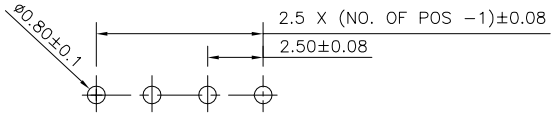


RECOMMENDED PCB LAYOUT

1.LF Products meet European Union Directives and other country Regulations as described in GS−22−008.

2.The Housing will withstand exposure to 260° peak temperature for 3.5 sec in a wave solder application with a 1.6mm Min thick circuitboard.

3.Lead Free or ROHS Directive labelling to be provided as per GS−14−920 for Lead Free version.

| ltr | ecn no | dr | date |
|---|---|---|---|
| P | I06-0123 | HVN | 2006-07-20 |
| R | I07-0039 | HVN | 2007-03-16 |

mat'l. code –

surface ISO 1302

tolerance ISO 406 ISO 1101

tolerances unless otherwise specified

angles 0°±2° linear ±0.13

projection

MM

scale 5:1

| | | |
|---|---|---|
| dr | MINI K VANDANATH | 2003-04-14 |
| engr | Hiran V N | 2003-04-14 |
| chr | HIRAN V N | 2007-03-16 |
| appd | HIRAN V N | 2007-03-16 |

product family RELIMATE

title RELIMATE HEADER VERTICAL

dwg no 67094

sheet 1 of 1

size A3

type Product Customer Drawing

| sheet index | revision | R |
|---|---|---|
| | sheet | 1 |

FCIconnect.com
Copyright FCI

form: A3

PDM: Rev:R STATUS:Released Printed: Mar 16, 2009