THIS DRAWING IS UNPUBLISHED. RELEASED FOR PUBLICATION ,19 .
© COPYRIGHT 19 BY AMP INCORPORATED. ALL RIGHTS RESERVED.

LOC	DIST
CM	53

REVISIONS

P	LTR	DESCRIPTION	DATE	DWN	APVD
	J	REV & REDWN PER EC 0G1B-0252-98	8-19-98	BL	RS

1. PARTS COMPLY TO AMP SOLDERABILITY SPECIFICATION 109-11-3.
2. CIRCUIT IDENTIFICATION CHARACTERS ARE ADJACENT TO THE INDICATED CAVITIES, BUT LOCATION AND ORIENTATION MAY DIFFER FROM PRINT.
3. DIMENSIONS IN BRACKETS ARE IN INCHES.

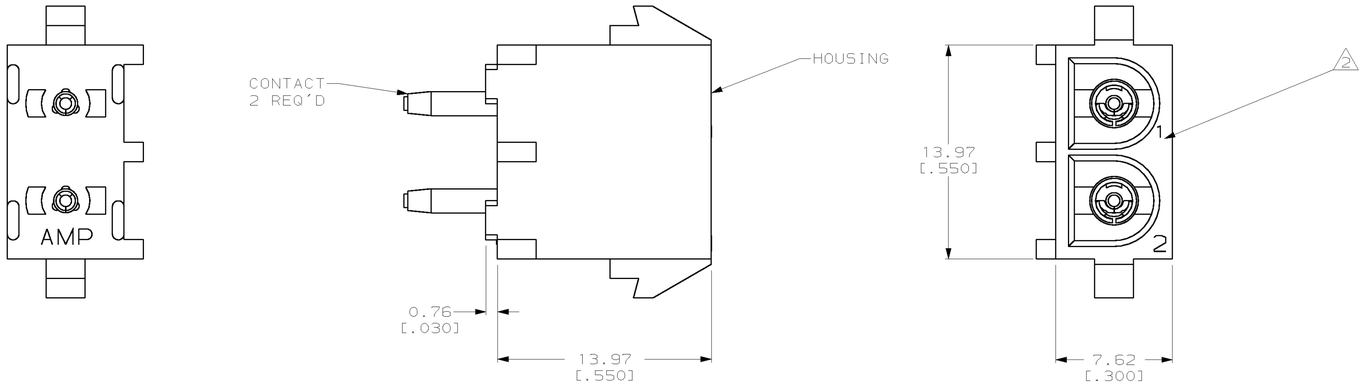

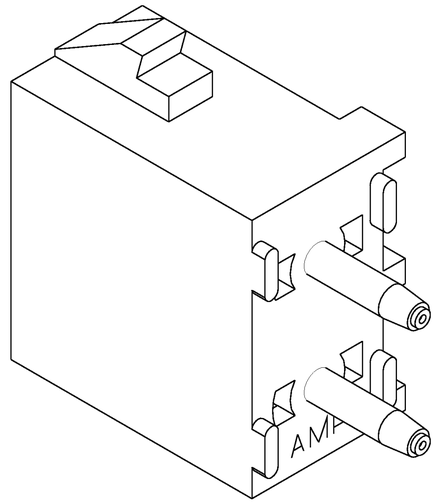

3-DIMENSIONAL MODEL
NTS

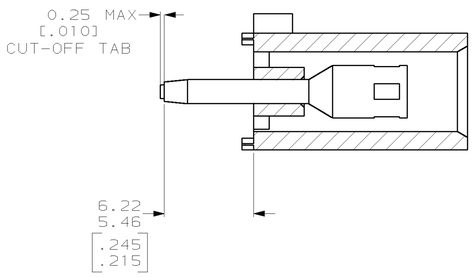

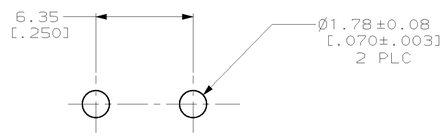

RECOMMENDED MOUNTING HOLE PATTERN
FOR 3.18 [.125] THICK P.C. BOARD

PHOSPHOR BRONZE, PRE-TIN	NYLON, UL94V-2, NATURAL	350986-4
PIN CONTACT MATERIAL AND FINISH	HOUSING MATERIAL	PART NO

THIS DRAWING IS A CONTROLLED DOCUMENT.

DIMENSIONS: mm [INCHES]

TOLERANCES UNLESS OTHERWISE SPECIFIED:
0 PLC ±-
1 PLC ±-
2 PLC ±0.13 [.005]
3 PLC ±-
4 PLC ±-
ANGLES ±0°30'

MATERIAL SEE TABLE
FINISH SEE TABLE

METRIC

DWN B. LEWIS 8-19-98
CHK R. SWING 8-19-98
APVD M. TRULL 8-19-98
PRODUCT SPEC —
APPLICATION SPEC —
WEIGHT —

AMP Incorporated
Harrisburg, PA 17105-3608

NAME SOCKET HEADER ASSEMBLY, 2 CIRCUIT UNIVERSAL MATE-N-LOK™

SIZE	CAGE CODE	DRAWING NO
A1	00779	C-350986

CUSTOMER DRAWING

SCALE	SHEET	OF	REV
5:1	1	1	J