THIS DRAWING IS UNPUBLISHED. RELEASED FOR PUBLICATION -,N/A .
© COPYRIGHT N/A By - ALL RIGHTS RESERVED.

LOC	DIST
—	—

REVISIONS

P	LTR	DESCRIPTION	DATE	DWN	APVD
	W2	REVISED PER ECO-15-016062	09NOV15	KG	CD

1. THIS PLUG IS DESIGNED TO CONFORM TO THE LATEST ISSUE OF MIL-C-24308.
2. MAX WIRE INSUL TO BE USED WITH THIS PLUG IS ø.054.
3. METAL RETENTION CLIPS ARE INCLUDED IN INSERTS.
4. ~~PACKAGE STAMPED M 24308/4-265F.~~
5. THIS PLUG WILL ACCEPT SIZE 22 PIN CONTACT M 39029/58-360 OR ANY TE HDD-22 PIN CONTACT.
6. MFG'S PART NO. STAMPED ON CONNECTOR REPRESENTS KIT NUMBER WITH CONTACTS.
7. UL/CSA DESIGNATION STAMPED ON SHELL.
8. FRONT SHELL HAS GROUNDING INDENTS ON 204503-4 ONLY, (NOT SHOWN).
9. FINISH: BRIGHT TIN PER ASTM-B-545, .000400-.000550 THK OVER COPPER PER AMS2418, .000050 MIN THK.
10. ~~204515-2 INK STAMPED, NEAR SIDE. M24308/4-12F INK STAMPED, FAR SIDE.~~

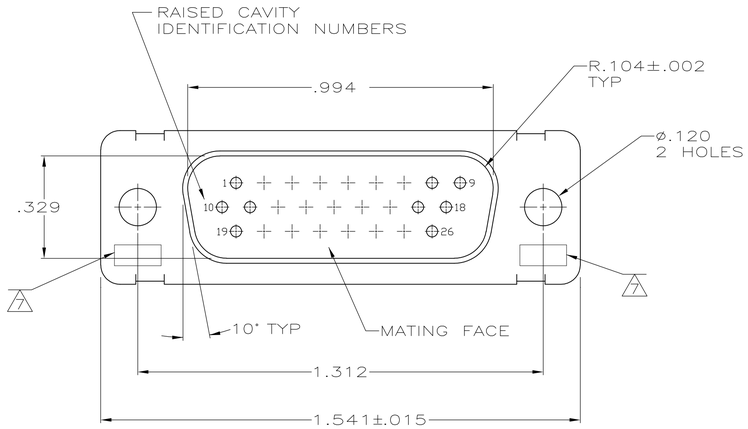

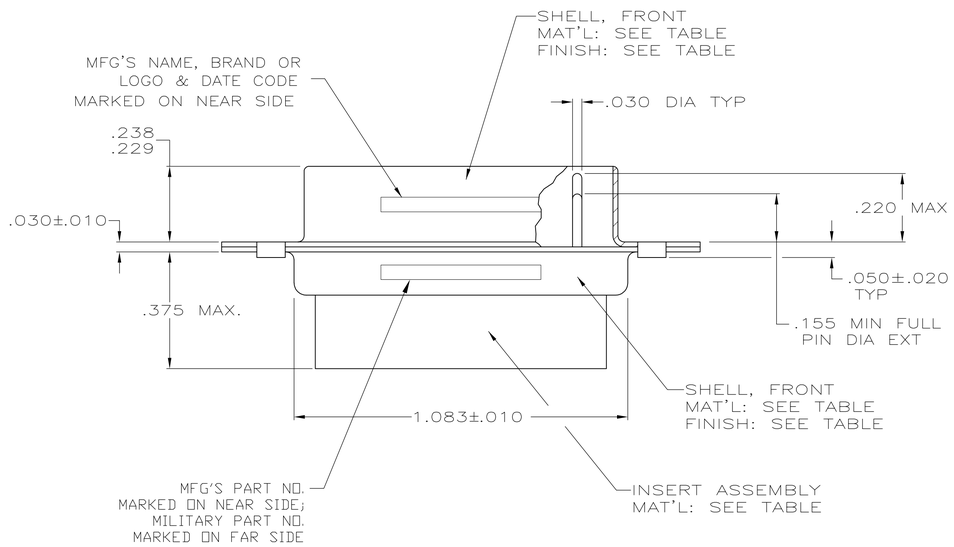

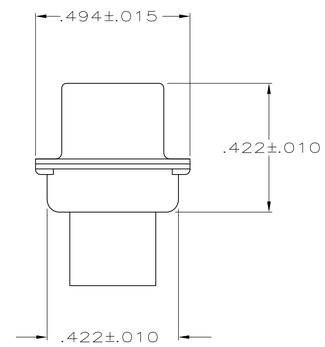

	REMARKS	MILITARY PART NO. MARKED ON PACKAGE	MILITARY PART NO. MARKED ON CONNECTOR	MFG PART NO. MARKED ON CONNECTOR	FINISH	SHELL MATERIAL	INSERT MATERIAL	PART NO.
		-	-	204503-5	9	STEEL, CLASS G	POLYPHENEYLENE SULFIDE (PPS) GST-40F PER MIL-M-24519 OR GLASS FILLED POLYESTER TPES013G30 PER ASTM D5927	204503-5
	8	-	-	204503-4	9	STEEL, CLASS G	POLYPHENEYLENE SULFIDE (PPS) GST-40F PER MIL-M-24519 OR GLASS FILLED POLYESTER TPES013G30 PER ASTM D5927	204503-4
	-	-	-	-	CADMIUM PER QQ-P-416	STEEL, CLASS G	PHENOLIC COLOR: BLACK	204503-3
OBSOLETE	-	-	-	-	CADMIUM PER QQ-P-416	BRASS	DIALLYL PHTHALATE COLOR: BLUE	204503-2
SUPSD BY 206500-4	6	M24308/4-265F	M24308/4-12F	204515-2	CADMIUM PER QQ-P-416	STEEL, CLASS G	POLYPHENEYLENE SULFIDE (PPS) GST-40F PER MIL-M-24519 OR GLASS FILLED POLYESTER TPES013G30 PER ASTM D5927	204503-1

THIS DRAWING IS A CONTROLLED DOCUMENT.

DIMENSIONS: INCHES

TOLERANCES UNLESS OTHERWISE SPECIFIED:
0 PLC ± -
1 PLC ± -
2 PLC ± -
3 PLC ± .005
4 PLC ± -
ANGLES ± 0°30'

MATERIAL: SEE TABLE
FINISH: SEE TABLE

DWN C.C.THOMAS 01-DEC-87
CHK FC BALLEW 25-JAN-88
APVD FC BALLEW 25-JAN-88
PRODUCT SPEC —
APPLICATION SPEC —
WEIGHT —

TE Connectivity

NAME: AMPLIMITE PLUG FOR PIN CONTACTS HI-DENSITY D CONNECTOR SIZE 2 (26 POSN) SERIES 90

SIZE	CAGE CODE	DRAWING NO	RESTRICTED TO
A1	00779	C-204503	—

CUSTOMER DRAWING | SCALE 4:1 | SHEET 1 OF 1 | REV W2

4805 (3/11)