REVISIONS				
REV.	ECN, ERN NO.	DATE	REV BY	APPRD.
A	PROPOSAL DRAWING	OCT25/06		L.Chan
B	PROPOSAL DRAWING	JUN08/12		L.Chan
C	PROPOSAL DRAWING	JUN11/12		L.Chan
D	FIX LED SCHEMATIC	JAN07/13		L.Chan

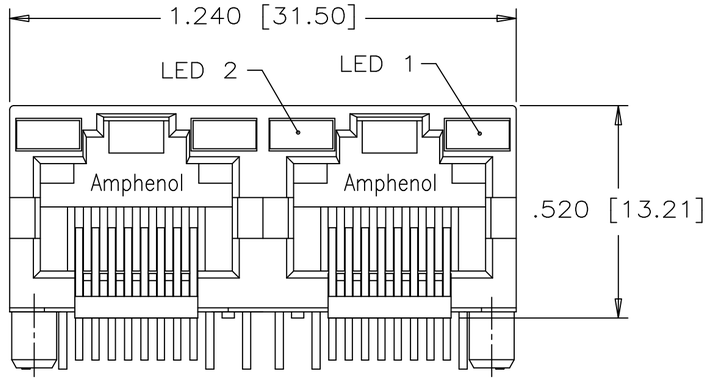

FRONT VIEW

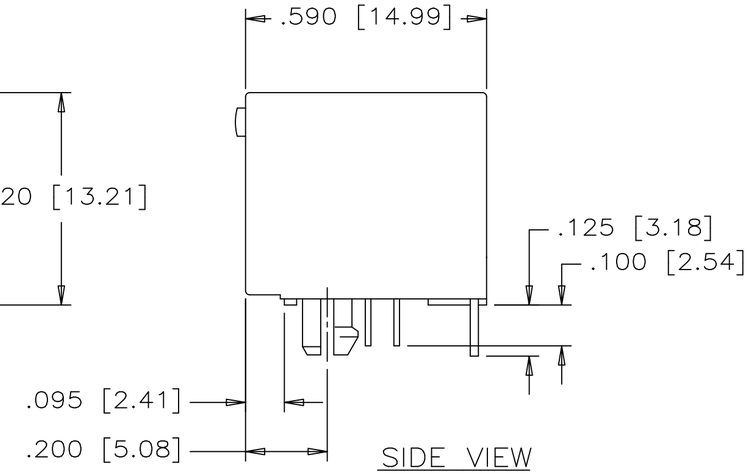

SIDE VIEW

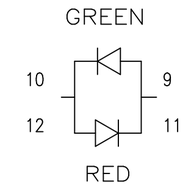

BI–COLOR LED DETAIL

(YELLOW/GREEN, RED/YELLOW AND GREEN/ORANGE LED'S ARE ALSO AVAILABLE)

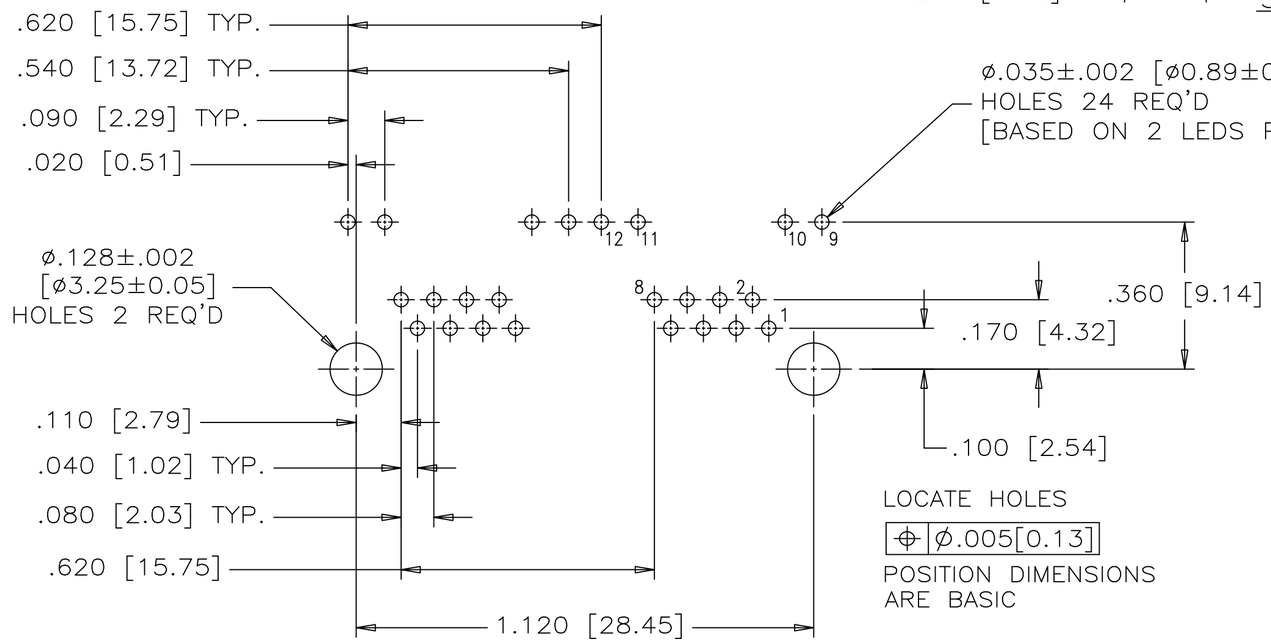

RECOMMENDED P.C.B. LAYOUT

(COMPONENT SIDE OF BOARD)

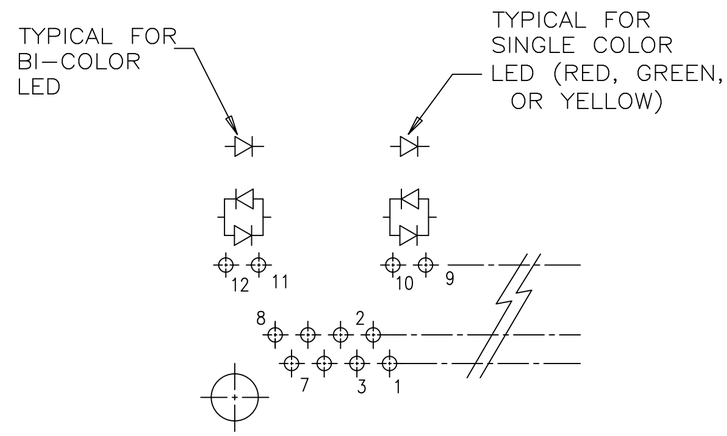

LED SCHEMATIC

MATERIALS:

PLASTIC HOUSING: ENGINEERING THERMOPLASTIC
FLAMMABILITY RATING UL 94V–0

CONTACTS: PHOSPHOR BRONZE
PLATING: 50 μ" [1.27 MICRONS]
MIN. GOLD ON MATING SURFACES.
50 μ" [1.27 MICRONS]
MIN. NICKEL UNDERPLATE
100 μ" [2.54 MICRONS]
MIN. MATTE TIN ON CONTACT TAILS.

PART NUMBER: RJHSE–508X–02

REFER TO AMPHENOL CATALOGUE FOR LED COLOUR OPTIONS

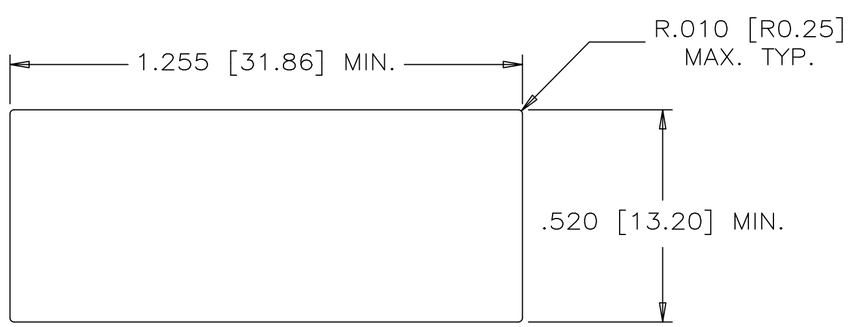

RECOMMENDED PANEL CUTOUT

AMPHENOL CANADA CORP
RoHS COMPLIANT
2011/65/EU RECAST

THIS DOCUMENT CONTAINS PROPRIETARY INFORMATION AND SUCH INFORMATION MAY NOT BE DISCLOSED TO OTHERS FOR ANY PURPOSE OR USED FOR MANUFACTURING PURPOSES WITHOUT WRITTEN PERMISSION FROM AMPHENOL CANADA CORP.

DRAWN J. Wang	DATE 00/02/14	Amphenol Canada Corp.
DESIGNED		TITLE 2 PORT HIGH SPEED MODULAR JACK, 8 POSITION, 8 CONTACTS, WITH LEDS, WITHOUT SHIELD
CHECKED Chigow Xu	00/05/31	
I. E. APPRD.		
Q. A. APPRD.		
DWG. APPRD.		
ENG. REL. NO.		DWG DRAWING NO. P–RJHSE–508X–02 REV. D
REF.		
DIMENSIONS ARE IN INCHES [mm]	CODE ID. NO. 03554	SCALE WT. ––––– SURF. ––––– SHEET 1 OF 1