DRAWING MADE IN THIRD ANGLE PROJECTION

THIS DRAWING IS UNPUBLISHED. RELEASED FOR PUBLICATION ,1988.

© COPYRIGHT 1988 BY AMP INCORPORATED. ALL INTERNATIONAL RIGHTS RESERVED.

PROD CODE	LOC	DIST
S327	DF	F0

P	F	ZONE	LTR	DESCRIPTION	DATE	APPD
			C	REDWN PER DF-2766 TW	4-90	DS
	✓		D	REV PER DF-5332 AG	1-92	DG
	✓		E	REV PER DF-5470 TA	2-10-92	DG
	✓		F	REV PER 0600-1388-93 TA	5-4-94	DG

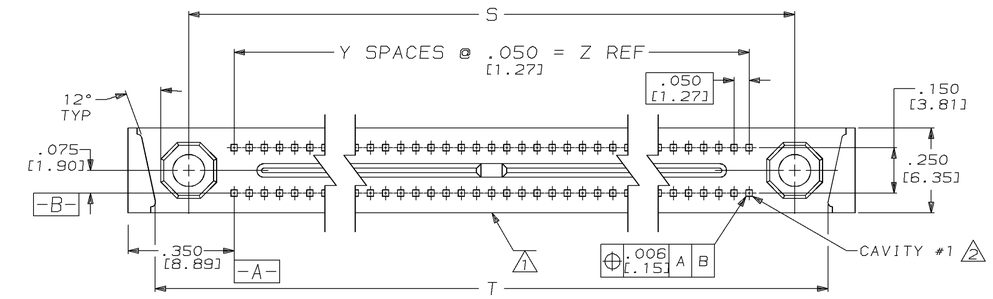

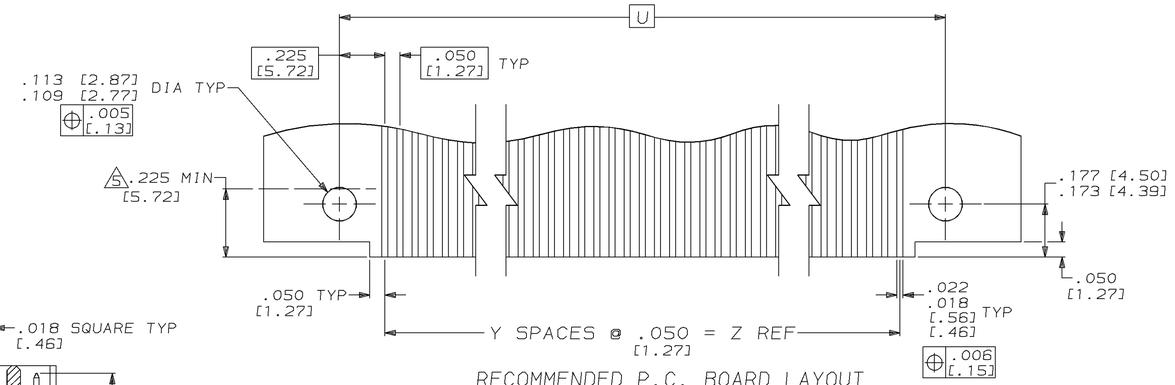

RECOMMENDED P.C. BOARD LAYOUT

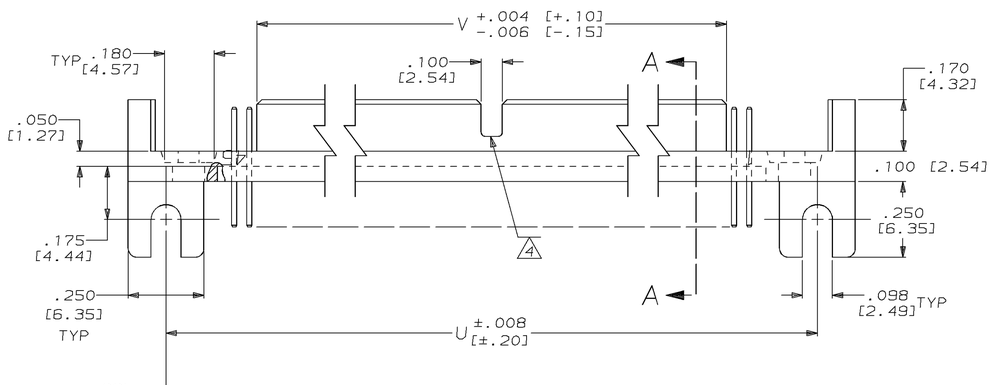

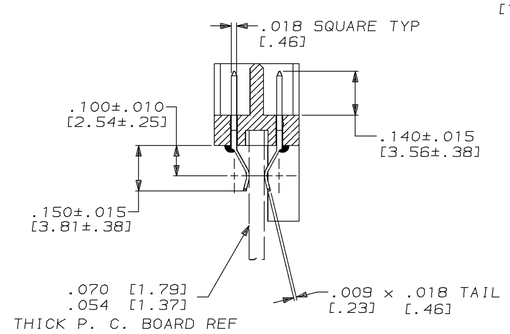

SECTION A-A

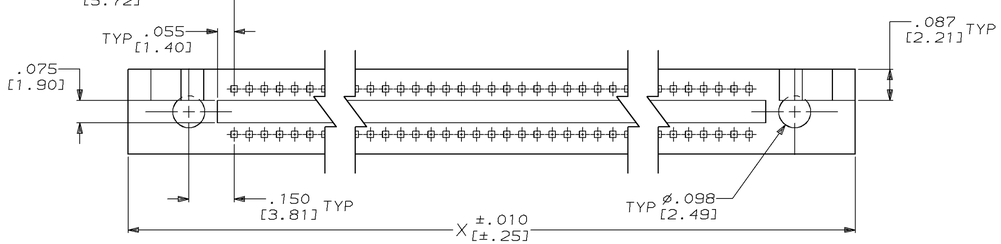

6	M55302/118-11	1 - 64	3.150 [80.01]	63	3.850 [97.79]	2.990 [75.95]	3.600 [91.44]	3.670 [93.22]	3.450 [87.63]	128	2-530744-2
6	M55302/118-10	1 - 55	2.700 [68.58]	54	3.400 [86.36]	2.540 [64.52]	3.150 [80.01]	3.220 [81.79]	3.000 [76.20]	110	2-530744-1
6	M55302/118-09	1 - 50	2.450 [62.23]	49	3.150 [80.01]	2.290 [58.17]	2.900 [73.66]	2.970 [75.44]	2.750 [69.85]	100	2-530744-0
6	M55302/118-08	1 - 45	2.200 [55.88]	44	2.900 [73.66]	2.040 [51.82]	2.650 [67.31]	2.720 [69.09]	2.500 [63.50]	90	1-530744-9
6	M55302/118-07	1 - 40	1.950 [49.53]	39	2.650 [67.31]	1.790 [45.47]	2.400 [60.96]	2.470 [62.74]	2.250 [57.15]	80	1-530744-8
6	M55302/118-06	1 - 35	1.700 [43.18]	34	2.400 [60.96]	1.540 [39.12]	2.150 [54.61]	2.220 [56.39]	2.000 [50.80]	70	1-530744-7
6	M55302/118-05	1 - 30	1.450 [36.83]	29	2.150 [54.61]	1.290 [32.77]	1.900 [48.26]	1.970 [50.04]	1.750 [44.45]	60	1-530744-6
6	M55302/118-04	1 - 25	1.200 [30.48]	24	1.900 [48.26]	1.040 [26.42]	1.650 [41.91]	1.720 [43.69]	1.500 [38.10]	50	1-530744-5
6	M55302/118-03	1 - 20	.950 [24.13]	19	1.650 [41.91]	.790 [20.07]	1.400 [35.56]	1.470 [37.34]	1.250 [31.75]	40	1-530744-4
6	M55302/118-02	1 - 15	.700 [17.78]	14	1.400 [35.56]	.540 [13.72]	1.150 [29.21]	1.220 [30.99]	1.000 [25.40]	30	1-530744-3
6	M55302/118-01	1 - 10	.450 [11.43]	9	1.150 [29.21]	.290 [7.37]	.900 [22.86]	.970 [24.64]	.750 [19.05]	20	1-530744-2
						SUPSD BY 2-530744-2					1-530744-1
						SUPSD BY 2-530744-1					1-530744-0
						SUPSD BY 2-530744-0					530744-9
						SUPSD BY 1-530744-9					530744-8
						SUPSD BY 1-530744-8					530744-7
						SUPSD BY 1-530744-7					530744-6
						SUPSD BY 1-530744-6					530744-5
						SUPSD BY 1-530744-5					530744-4
						SUPSD BY 1-530744-4					530744-3
						SUPSD BY 1-530744-3					530744-2
						SUPSD BY 1-530744-2					530744-1
HSG MAT'L	MILITARY PART NUMBER	2	Z	Y	X	V	U	T	S	NO. OF POSN.	PART NUMBER

1. AMP, 00779, AMP PART NUMBER, MILITARY PART NUMBER AND DATE CODE MARKED IN THIS APPROXIMATE AREA.
2. NUMBERS INDICATING END POSITIONS MARKED THIS SIDE ONLY.
3. MEETS ALL APPLICABLE REQUIREMENTS OF MIL-C-55302.
4. SLOT IN TONGUE IS NOT APPLICABLE FOR 20 THRU 50 POSITION.
5. MINIMUM PAD LENGTH ON CIRCUIT BOARD.
6. HOUSING MATERIAL: LIQUID CRYSTAL POLYMER PER MIL-M-24519, GLCP-30F; COLOR: GRAY.
7. CONTACT FINISH: PLATED GOLD .000050 THICK IN CONTACT AREA, PLATED TIN-LEAD .000100 THICK ON TAILS, ALL OVER NICKEL .000030 THICK.

DO NOT SCALE PRINT.
UNLESS SPECIFIED
DIMENSIONS IN INCHES [mm]
TOLERANCES ON :
2 PLC DEC ± ——
3 PLC DEC ±.005 [.013]
ANGLES ± 0° 30'

MATERIAL
CONTACT: BRASS
HOUSING: 6 7

FINISH
CONTACT: 8

DR 3-12-90 T.WIEST
CHK 4-1-90 D. STONER
APPD 4-1-90 D. STONER
APPD 4-1-90 D. STONER
PRODUCT SPEC –
APPLICATION SPEC –
WEIGHT –

AMP | AMP INCORPORATED Harrisburg, Pa. 17105

NAME
PIN HEADER ASSEMBLY, MINI BOX, CARD EXTENDER, MILITARY

SIZE D | FSCM NO 00779 | DRAWING NO 530744

SCALE 4:1 | SHEET 1 OF 1

CUSTOMER DRAWING

AMP 1756-3 REV 3-87

04 MAY 1994 11:58:38 AMP34874 <A91288-DEPT0030>U.BOX