THIS DRAWING IS UNPUBLISHED. RELEASED FOR PUBLICATION 20
© COPYRIGHT 20 BY TYCO ELECTRONICS CORPORATION. ALL RIGHTS RESERVED.

PART NUMBER	REV	TERMINATOR	FEED TYPE	DESCRIPTION
1530060-1	A	LEADMAKER	MECH POST FEED	CUTS CARRIER
1530060-2	A	BENCH	MECH PRE FEED	CUTS CARRIER
1530060-6	A	LEADMAKER	MECH POST FEED	CONTINUOUS CARRIER
7-1530060-1	A	LEADMAKER	MECH POST FEED	-1 AND SPARE PARTS
7-1530060-2	A	BENCH	MECH PRE FEED	-2 AND SPARE PARTS
7-1530060-6	A	LEADMAKER	MECH POST FEED	-6 AND SPARE PARTS
7-1530060-7	A	-	-	SPARE PARTS KIT

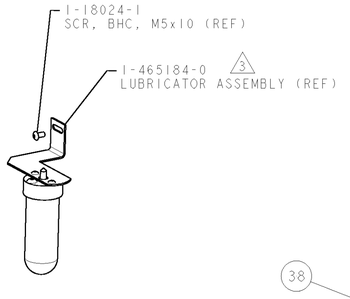

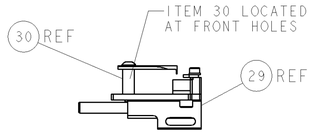

FEED TRACK POSITION
GUIDE BY INS. BARREL

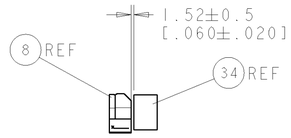

TERMINAL SUPPORT
LOCATION

CRIMP DATA	LEAR TERMINAL		TE CRIMP SPECS
TERMINAL NAME: RECEPTACLE TERMINAL			
CRIMP	SIZE	TYPE	RANGE
WIRE	2.79 [.110 IN]	F	16-14 AWG
INSUL	3.05 [.120 IN]	F	Ø3.05mm MAX [Ø.120 MAX]
WIRE STRIP LENGTH 4.75-5.13 [.187-.202 IN]			APPL INSTRUCTIONS 408-8322 & 408-8490
TERMINAL APPL SPEC	NONE -		FEED 18.67 [.735 IN]

TERMINALS APPLIED

TE PN	MNF PN	-	-
1949009-1	771416-HK200	-	-
1949009-2	771416-FK200	-	-
-	-	-	-
-	-	-	-

WIRE SIZE	CRIMP HEIGHT *	REF SETTING *
14AWG	2.11 ±0.05 [.083 ±.002 IN]	C1
16AWG	1.88 ±0.05 [.074 ±.002 IN]	D8
-	-	-
-	-	-
-	-	-
-	-	-
-	-	-
-	-	-
-	-	-
-	-	-
-	-	-

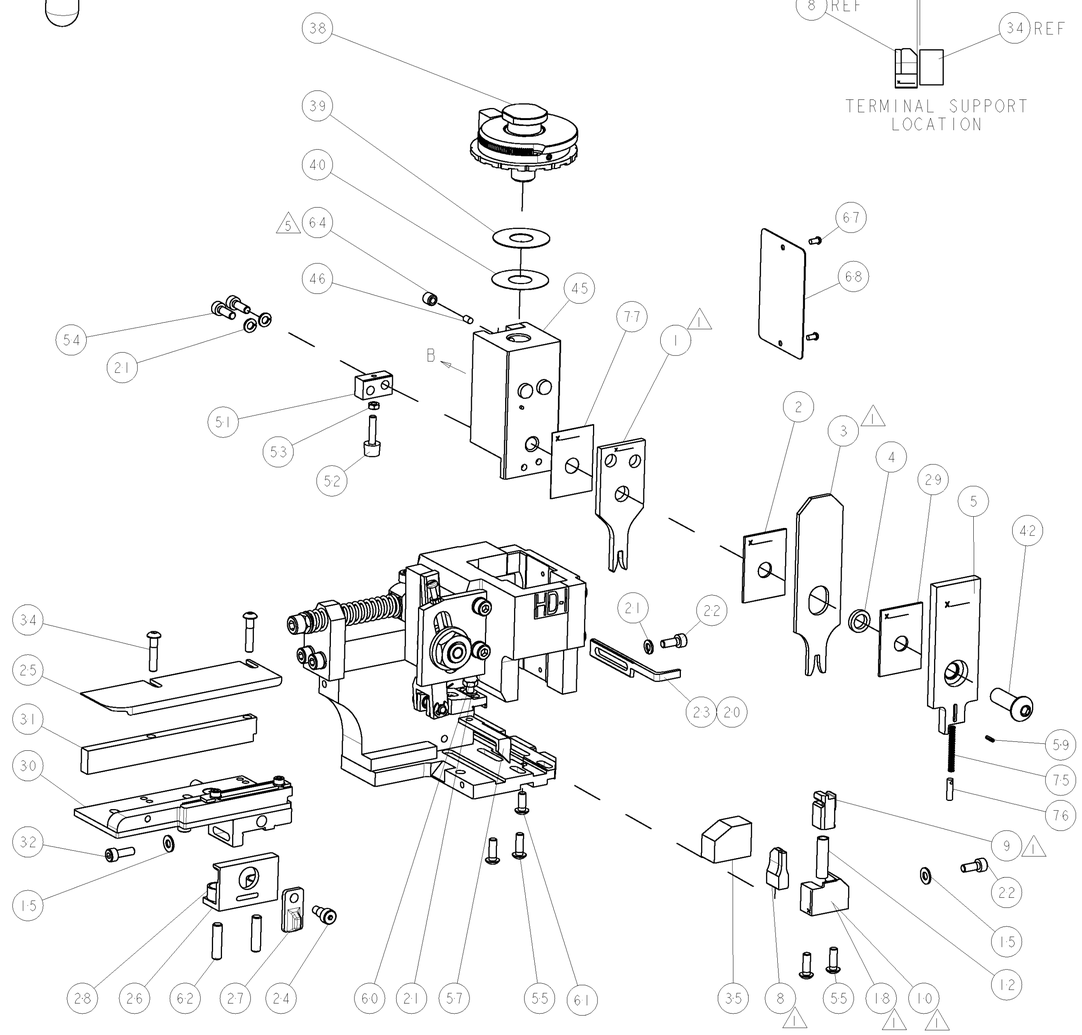

1. RECOMMENDED SPARE PARTS.
2. GREASE RAM, CAM, CAM FOLLOWER AND FEED ROD LIGHTLY.
3. CERTAIN TERMINALS REQUIRE LUBRICATION. REFER TO THE APPLICATOR INSTRUCTION SHEET FOR MORE INFORMATION.
4. LUBRICATE DAILY PER THE APPLICATOR INSTRUCTION SHEET SUPPLIED WITH THE APPLICATOR.

* WARNING
ON INSTALLATION, SET WIRE DISC TO LARGEST WIRE SIZE SETTING. USE OF SETTINGS BELOW MIN. REQUIRED CRIMP HEIGHT SETTING WILL CAUSE DAMAGE TO CRIMP TOOLING.

VIEW B ROTATED 180°

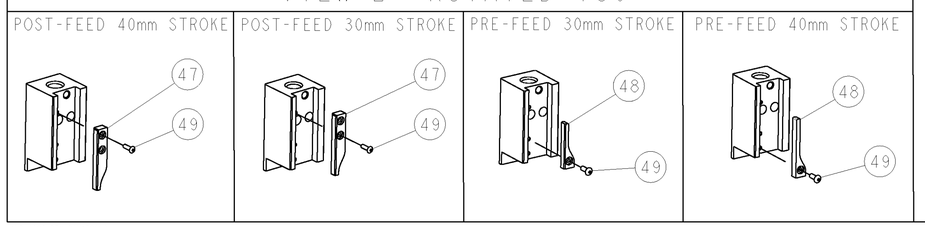

-77	-76	-72	-71	-6	-2	-1	PART NO	DESCRIPTION	ITEM NO
-	1	1	1	1	1	1	455888-1	SPACER, CRIMPER	77
-	1	1	1	1	1	1	854769-4	HOLDER, INS	76
-	1	1	1	1	1	1	1-22278-0	SPRING, COMPRESSION	75
-	-	-	-	-	-	-	-	-	74
-77	-76	-72	-71	-6	-2	-1	PART NO	DESCRIPTION	ITEM NO

SET UP GAGE 458637-3

LOC	DIST
A	66

REVISIONS

P	LTR	DESCRIPTION	DATE	DWN	APVD
	1	DEVELOPMENT	21JAN2009	K.H	S.X
	A	RELEASED	20MAR2009	BH	BH

-77	-76	-72	-71	-6	-2	-1	PART NO	DESCRIPTION	ITEM NO
-	-	-	-	-	-	-	-	-	73
-	1	1	1	1	1	1	1338705-3	DOCUMENTATION PACKAGE	72
-	-	-	-	-	-	-	-	-	71
-	-	-	-	-	-	-	-	-	70
-	-	-	-	-	-	-	-	-	69
-	1	1	1	1	1	1	461264-5	PLATE, IDENTIFICATION	68
-	2	2	2	2	2	2	21017-2	SCREW, DRIVE	67
-	-	-	-	-	-	-	-	-	66
-	-	-	-	-	-	-	-	-	65
-	1	1	1	1	1	1	3-18031-0	SCR, SET, CUP POINT M6 X 6.0	64
-	-	-	-	-	-	-	-	-	63
-	2	2	2	2	2	2	2-18032-5	SCR, SET, FLT POINT M5 X 20.0	62
-	1	1	1	1	1	1	18024-7	SCR, BTN SKT HD CAP (M4 X 10.0)	61
-	1	1	1	1	1	1	5-18022-2	SCR, HEX HD CAP M4 X 8.0	60
-	1	1	1	1	1	1	21028-2	PIN, SLOTTED SPRING .062 X .250	59
-	-	-	-	-	-	-	-	-	58
-	1	1	1	1	1	1	1338685-1	PAWL, FEED	57
-	-	-	-	-	-	-	-	-	56
-	4	4	4	4	4	4	18024-8	SCR, BTN SKT HD CAP (M4 X 12.0)	55
-	2	2	2	2	2	2	1-18023-2	SCR, SKT HD CAP M4 X 12.0	54
-	1	1	1	1	1	1	18030-1	NUT, HEX, REG M3	53
-	1	1	1	1	1	1	811242-5	BUMPER, HOLD DOWN	52
-	1	1	1	1	1	1	690753-2	SPACER, TONKER	51
-	1	1	1	1	1	1	18024-3	SCR, BTN SKT HD CAP (M3 X 10.0)	50
-	-	1	-	-	1	-	1338675-1	CAM, UNIVERSAL PRE FEED	49
-	1	-	1	1	-	1	1338676-1	CAM, UNIVERSAL POST-FEED	48
-	1	1	1	1	1	1	1320999-3	APPLICATOR SUBASSEMBLY, HDI	47
-	1	1	1	1	1	1	690191-1	PLUG,NYLON	46
-	1	1	1	1	1	1	1333257-1	RAM	45
-	-	-	-	-	-	-	-	-	44
-	-	-	-	-	-	-	-	-	43
-	1	1	1	1	1	1	2-18024-6	SCR, BTN SKT HD CAP (M8 X 25.0)	42
-	-	-	-	-	-	-	-	-	41
-	1	1	1	1	1	1	690125-1	SHIM SUB-ASSY	40
-	1	1	1	1	1	1	1-469367-0	SHIM	39
-	1	1	1	1	1	1	879103-2	FINE ADJUST HEAD ASSEMBLY	38
-	-	-	-	-	-	-	-	-	37
-	-	-	-	-	-	-	-	-	36
-	1	1	1	1	1	1	1320934-6	SUPPORT, TERMINAL	35
-	2	2	2	2	2	2	1-18024-0	SCR, BTN SKT HD CAP (M4 X 20.0)	34
-	1	1	1	1	1	1	18027-2	WASHER, FLAT, REG M4	33
-	1	1	1	1	1	1	1-18023-2	SCR, SKT HD CAP M4 X 12.0	32
-	1	1	1	1	1	1	1320908-2	SPACER, STRIP GUIDE	31
-	1	1	1	1	1	1	1633073-1	STRIP GUIDE ASSEMBLY	30
-	1	1	1	1	1	1	1-455888-0	SPACER, CRIMPER	29
-	2	2	2	2	2	2	1-22284-0	SPRING, COMPRESSION	28
-	1	1	1	1	1	1	356835-1	LEVER, DRAG RELEASE	27
-	1	1	1	1	1	1	240792-1	DRAG, TERMINAL	26
-	1	1	1	1	1	1	1320928-1	PLATE, STRIP GUIDE	25
-	1	1	1	1	1	1	980371-4	SCR, SKT HD SHLDR 5.0 DIA X 6.0	24
-	1	-	1	1	-	1	690472-2	STRIPPER	23
-	1	1	1	1	1	1	1-18023-1	SCR, SKT HD CAP M4 X 10.0	22
-	4	4	4	4	4	4	18025-2	WASHER, SPRG LOCK, REG M4	21
-	-	1	-	-	1	-	690472-1	STRIPPER	20
-	-	-	-	-	-	-	-	-	19
-	1	-	-	1	-	-	1338684-1	SHEAR HOLDER, FRONT	18
-	-	-	-	-	-	-	-	-	17
-	-	-	-	-	-	-	-	-	16
-	1	1	1	1	1	1	18027-2	WASHER, FLAT, REG M4	15
-	-	-	-	-	-	-	-	-	14
-	-	-	-	-	-	-	-	-	13
-	1	1	1	1	1	1	3-22280-3	SPRING, COMPRESSION	12
-	1	1	1	1	1	1	1-18023-1	SCR, SKT HD CAP M4 X 10.0	11
-	-	1	1	-	1	1	1320921-1	SHEAR HOLDER, FRONT, CUT	10
-	1	1	1	1	1	1	1-454276-9	FLOATING SHEAR, FRONT	9
1	2	2	2	1	1	1	5-1333207-1	ANVIL, COMBINATION .100	8
-	-	-	-	-	-	-	-	-	7
-	-	-	-	-	-	-	-	-	6
-	1	1	1	1	1	1	1-854772-4	DEPRESSOR, SHEAR	5
-	1	1	1	1	1	1	1-238011-7	BLOCK, CRIMPER SPACER	4
1	2	2	2	1	1	1	1-456134-0	CRIMPER, INSULATION F PREMIUM	3
-	1	1	1	1	1	1	1-455888-1	SPACER, CRIMPER	2
1	2	2	2	1	1	1	456408-6	CRIMPER, WIRE PREMIUM	1
-77	-76	-72	-71	-6	-2	-1	PART NO	DESCRIPTION	ITEM NO

THIS DRAWING IS A CONTROLLED DOCUMENT FOR TYCO ELECTRONICS CORPORATION. IT IS SUBJECT TO CHANGE AND THE CONTROLLING ENGINEERING ORGANIZATION SHOULD BE CONTACTED FOR THE LATEST REVISION.

DIMENSIONS: mm [IN]

TOLERANCES UNLESS OTHERWISE SPECIFIED:
0 PLC ±-
1 PLC ±-
2 PLC ±-
3 PLC ±-
4 PLC ±-
ANGLES ±-

MATERIAL - -
FINISH - -

DWN K.HUANG 21JAN2009
CHK S.XI 21JAN2009
APVD S.XI 21JAN2009

PRODUCT SPEC -
APPLICATION SPEC See Table
WEIGHT -

Tyco Electronics
Tyco Electronics
Harrisburg, PA 17105-3608

NAME FINE ADJUST SIDE FEED HDI APPLICATOR

SIZE	CAGE CODE	DRAWING NO	RESTRICTED TO
A1	00779	C-1530060	-

CUSTOMER DRAWING SCALE 3:5 SHEET 1 OF 1 REV A

Mouser Electronics

Authorized Distributor

Click to View Pricing, Inventory, Delivery & Lifecycle Information:

TE Connectivity:

1530060-2